NAVSEA T9007-AY-SBS-010

SPECIFICATIONS FOR BUILDING

40 FOOT UTILITY BOAT MARK 6 FY 85

NAVAL SEA SYSTEMS COMMAND
DEPARTMENT OF THE NAVY
WASHINGTON,D.C. 20360

SPECIFICATIONS FOR BUILDING

40 FOOT

UTILITY BOAT

MARK 6

FY 85

Approved

Herbert C. Crane

For Commander
Naval Sea Systems Command

April 15, 1985

Material ordering schedule
Data submission schedule
Test schedule

These schedules shall be kept current with the progress of the work. As each item on each schedule is completed this shall be indicated; thus these schedules will also serve as reports on the progress of the work.

SECTION 070
GENERAL REQUIREMENTS FOR DESIGN AND CONSTRUCTION

070a. Characteristics

The boat defined by the drawings and these specifications has the following general characteristics:

Length, overall (Hull) - 39'-11"
Beam, (Hull) - 11'-10"
Design draft, full load (to baseline) - 3'-6"
Hoisting weight (Max.) - 17,000 lbs.
Displacement, full load (approx.) - 28,800 lbs.
Fuel capacity - 112 gallons
Propulsion engine (hp) - 174
Electrical system (nominal) - 24 vdc
Capacity (including crew) - 75 persons
Crew - 4 persons
Hull construction - GRP

070b. General requirements for equipment, machinery and materials

Except as otherwise indicated in the contract, all material, equipment, and machinery items shall be furnished or purchased by the Contractor in accordance with the contract requirements.

All materials, equipment, and machinery installed in or delivered with the boat shall be new and of the quality specified herein.

All material, equipment, and machinery regardless of by whom furnished or procured shall be installed or stowed, as appropriate, by the Contractor.

The Contractor shall be responsible for the satisfactory operation of such items unless it can be shown to the satisfaction of NAVSEA that the fault is caused by the design of the machinery or equipment or by faulty materials supplied by the Government. The Contractor shall obtain all necessary engineering services required for the installation of Government Furnished Material.

To achieve ready replacement of parts, the Contractor shall standardize on selection of equipment and fittings within all boats under the contract.

Asbestos shall not be used in applications where a functionally equivalent non-asbestos substitute is available. If an equivalent substitute is unavailable, approval for the use of asbestos shall be obtained from the Supervisor for each application. Detailed rationale shall accompany each such request.

070c. Definitions

The following definitions shall apply throughout this specification and on the drawings:

GENERAL NOTES

1. INTERPRET DIMENSIONS IN ACCORDANCE WITH ANSI-Y-14.5
   THRU ANSI-Y-14.5 AND ANSI-Y-14.5.
2. URETHANE FENDER SEE REFERENCE 9 AND REFERENCE 5.
3. BOW CHOCKS SEE REFERENCE 9 AND REFERENCE 9.
4. FOR BOW RAIL SEE REFERENCE 9 AND REFERANCE 5.
5. FOR JACKSTAFF SEE REFERENCE 4 AND REFERENCE 6.
6. FOR HORN SEE REFERENCE 8
   (ELECTRICAL) AND REFERENCE 10 -
   CANOPY ARRANGEMENT FOR HORN COVER.
7. FOR BILGE PUMP SEE REFERENCE 9 AND REFERENCE 9.
8. FOR FLUSH MOUNTED RECEPTACLE (JACKSTAFF
   AND NAVIGATION LIGHTS) SEE REFERENCE 9 AND REFERENCE 8
9. FOR CONTROL CONSOLE SEE REFERENCE 14. REFERENCE 5. AND REFERENCE 9
10. FOR COMPASS AND MOUNT BRACKET SEE
    REFERENCE 4. REFERENCE 5. AND REFERENCE 10 FOR
    COMPASS COVER
11. FOR COXSWAINS RAIL SEE REFERENCE 9 AND REFERENCE 5.
12. FOR FUEL FILL LINE SEE REFERENCE 9 AND REFERENCE 8.
13. SEE REFERENCE 9 REFERENCE 5 FOR AFT ACCESS COVERS
14. SEE REFERENCE 9. AND REFERENCE 5 FOR ENGINE COVER.
15. FOR ENGINE BOX SEE REFERENCE 9 AND REFERENCE 5.
16. FOR FORWARD ACCESS COVERS LIFTING
    FITTING SEE REFERENCE 9 AND REFERENCE 11
17. FOR AFT ACCESS COVERS AND LIFTING FITTINGS
    SEE REFERANCE 9 AND REFERENCE 11
18. FOR BATTERY COVER & FLUSH COVER LIFT HANDLE EQUIPMENT SEE
    REFERENCE 9 AND REFERENCE 5.
19. FOR STERN RAIL SEE REFERENCE 9 AND REFERENCE 5.
20. FOR ENSIGN STAFF SEE REFERENCE 9 AND REFERENCE 8.
21. FOR CONTROL HEAD SEE REFERENCE 9 AND REFERANCE 5.
22. GOVERNMENT FURNISHED EQUIPMENT (GFE)
23. COMPASS, COMPASS BRACKET, HAND LANTERN, HANDLE LANTERN, LANTERN BRACKET
    BATTERY DRY HAND LANTERN, FIRE EXTINGUISHER, ANCHOR, ANCHOR CHAIN
    ASSEMBLY, BOAT FENDER, BOAT HOOK, RING BUOY, RAIL
    AND ROPE INSTALLED AT ASSEMBLY.
24. FOR BENCHES SEE REFERENCE 9 AND REFERANCE 5.
25. FOR SEAT DETAILS SEE REFERENCE 9 AND REFERENCE 9
26. FOR FLUSH HATCH DETAIL SEE REFERENCE 9
27. FOR DECK CLEAT - (2) PL - SEE REFERENCE 9
28. FOR SKENE CHOCK - (2) PL - SEE REFERENCE 9
29. FOR ENGINE SPACE ACCESS COVER SEE REFERENCE 9
30. FOR ANCHOR LIGHT SEE REFERENCE 9 AND 8
31. FOR MASTHEAD LIGHT SEE REFERENCE 9 AND 8
32. FOR COMBINATION LIGHT SEE REFERENCE 9 AND 8
33. FOR RAIL AND STAFF SOCKETS SEE REFERENCE 6
34. SEE REFERENCE 9 FOR PLANKED ITEM
35. FOR CONSOLE FOLDING LEG ASSEMBLY SEE REFERENCE 9

REVISIONS

ZONE	REV.	DESCRIPTION	DATE	APPROVED
ALL	B	ECR # 181-S104246-A-01	2/27/97	

REFERENCES LIST

12	H	S104256	8	LABEL PLATE LIST	N00024-90-C-2001
10	H	S104259	4	CANDLE ARR. AND DETAILS	N00024-90-C-2001
11	H	S104264	2	MOUNTING ARR. AND DETAILS	N00024-90-C-2001
10	H	S104258	3	CANOPY ARR. AND DETAILS	N00024-90-C-2001
9	H	S104252	2	PIPING SYSTEM ARR. AND DETAILS	N00024-90-C-2001
8	H	S104251	5	ELECTRICAL SYSTEM ARR. AND DETAILS	N00024-90-C-2001
7	H	S104253	9	MAIN MACHINERY AND STEERING ARR. DETAILS	N00024-90-C-2001
6	H	S104249	8	OUTFIT AND MISCELLANEOUS FOUNDATIONS	N00024-90-C-2001
5	H	S104248	8	MISCELLANEOUS DETAILS	N00024-90-C-2001
4	H	S104247	5	GENERAL ARR. AND CONSTRUCTION DETAILS	N00024-90-C-2001
3	H	S104246	8	OUTBOARD PROFILE AND ARRANGEMENT	N00024-90-C-2001
2	H	S104245	8	CURVES OF FORM	N00024-90-C-2001
1	H	S104244	6	LINES AND OFFSETS	N00024-90-C-2001
	H	S104242	1	BOAT DRAWING INDEX	N00024-90-C-2001

REV.	ITEM	DOCUMENT NUMBER	REV.	NOMENCLATURE OR DESCRIPTION	CONTRACT NUMBER

PARTS LIST

2A3-10		20.03	BH	1	53711	GFE	PANEL, SAILMAKERS	TYP49-88-188-8425		30
2A3-11		20.03	BH	2	53711	GFE	ROPE, 3/8 DIA MANILLA	MIL-R-17343		31
2A3-12		20.03	BH	1	53711	GFE	RING BUOY	9920-00-275-3126	181	32
2A3-13			BH				DELETED			33
2A3-14		20.03	BH	8	53711	GFE	BOOM, BOAT 8 FOOT	2040-00-289-9138	181	34
2A3-15		20.03	BH	5	53711	GFE	PENNEL BOAT	2040-00-819-4195		35
2A3-16	STEEL		BH	1	54380	COMMERCIAL	BRACKET, FIRE EXTINGUISHER		181	36
2A3-17		20.03	BH	1	53711	GFE	ROPE, MANILA 3 CIRC X 100 FT.	MIL-R-17343		37
2A3-18		20.03	BH	1	53711	GFE	ANCHOR CHAIN ASSEMBLY	4010-00-255-3518		38
2A3-1		20.03	BH	1	53711	GFE	ANCHOR, 20 LBS.	2040-00-277-8257		39
2A3-2		20.03	BH	1	53711	GFE	EXTINGUISHER, CO2 10 LBS.	4210-00-260-8217	181	40
2A3-3		20.03	BH	8	53711	GFE	BATTERY DRY HAND LANTERN	6130-00-998-3238	181	41
2A3-4		20.03	BH	1	53711	GFE	LANTERN, HANDLE	6230-00-778-3909	181	42
2A3-5		20.03	BH	1	53711	GFE	LANTERN, HOOK	5306-00-705-6341	181	43
2A3-6		18.20.03	BH	1	53711	GFE	COMPASS BRACKET ASSEMBLY	6605-00-244-7818	181	44
2A3-7		18.20.03	BH	1	53711	GFE	COMPASS, MAGNETIC-ABOVE 45	6605-00-935-8238	181	45
1A4-8	STEEL/GLASS	CL	BH	1	54380		ENGINE SPACE ACCESS COVER		181	46
1A4-9	FIBERGLASS	19.18	BH	1	99367		AFT FLAT ACCESS COVER		181	47
1A4-13	FIBERGLASS	17.18	BH	1	99367		AFT LIFTING FITTING ACCESS COVER		181	48
1A4-14	FIBERGLASS	19.18	BH	1	99367		FWD LIFTING FITTING ACCESS COVER		181	49
1A4-15	FIBERGLASS	19.18	BH	1	99367		FWD LIFTING FITTING ACCESS COVER		181	50
1A4-16	FIBERGLASS	17.18	BH	1	99367		AFT LIFTING FITTING ACCESS COVER		181	51
1A4-17	FIBERGLASS	19.18	BH	1	99367		AFT FLAT ACCESS COVER		181	52
							DELETED			53
							DELETED			54
							DELETED			55
							DELETED			56
							DELETED			57
							DELETED			58
							DELETED			59
							DELETED			60
							DELETED			61
							DELETED			62
							DELETED			63
							DELETED			64
2A4-19		20.18	CH	1	53711	GFE	LANTERN BRACKET	2330-00-579-7981	181	65
4A1-4		20.18	BP	1	53711	GFE	BELL WITH BRACKET	5330-00-880-6885	181	66
							DELETED			67

PART NO.	MATERIAL	NOTES	REF. DESIGN	F	-1	FSCM NO.	PART OR IDENTIFYING NO.	NOMENCLATURE OR DESCRIPTION	MATERIAL SPECIFICATION	QTY.

UNLESS OTHERWISE SPECIFIED ALL DIMENSIONS ARE IN INCHES
FRACTIONS DECIMALS ANGLES
± 1/16 0-5 DEC ± 1/2
XX ± .03
XXX ± .005
ANGLES ± 1/16

THE GILLIG CORPORATION
SPRINGFIELD, OHIO

APPROVALS | DATE
CUSTOMER
MGT-FC-97
NAVY
MGT-FC-97
CONTRACTOR
2-27-97
NAVY
MGT-FC-97

DEPARTMENT OF THE NAVY
NAVAL SEA SYSTEMS COMMAND
WASHINGTON D.C. 20362

48 FT UTILITY BOAT MK 6

OUTBOARD PROFILE AND ARRANGEMENT

DIVISION NO. 181 | SHEET NO. 1 | SIZE D | CAGE NO. 53711 | DWG NO. S104246 | REV. B
TYPE OF SHEET PREPARED FOR ... SHEET 1 OF 2

ENG. NO. S104246 | SHEET REV. 1 | B

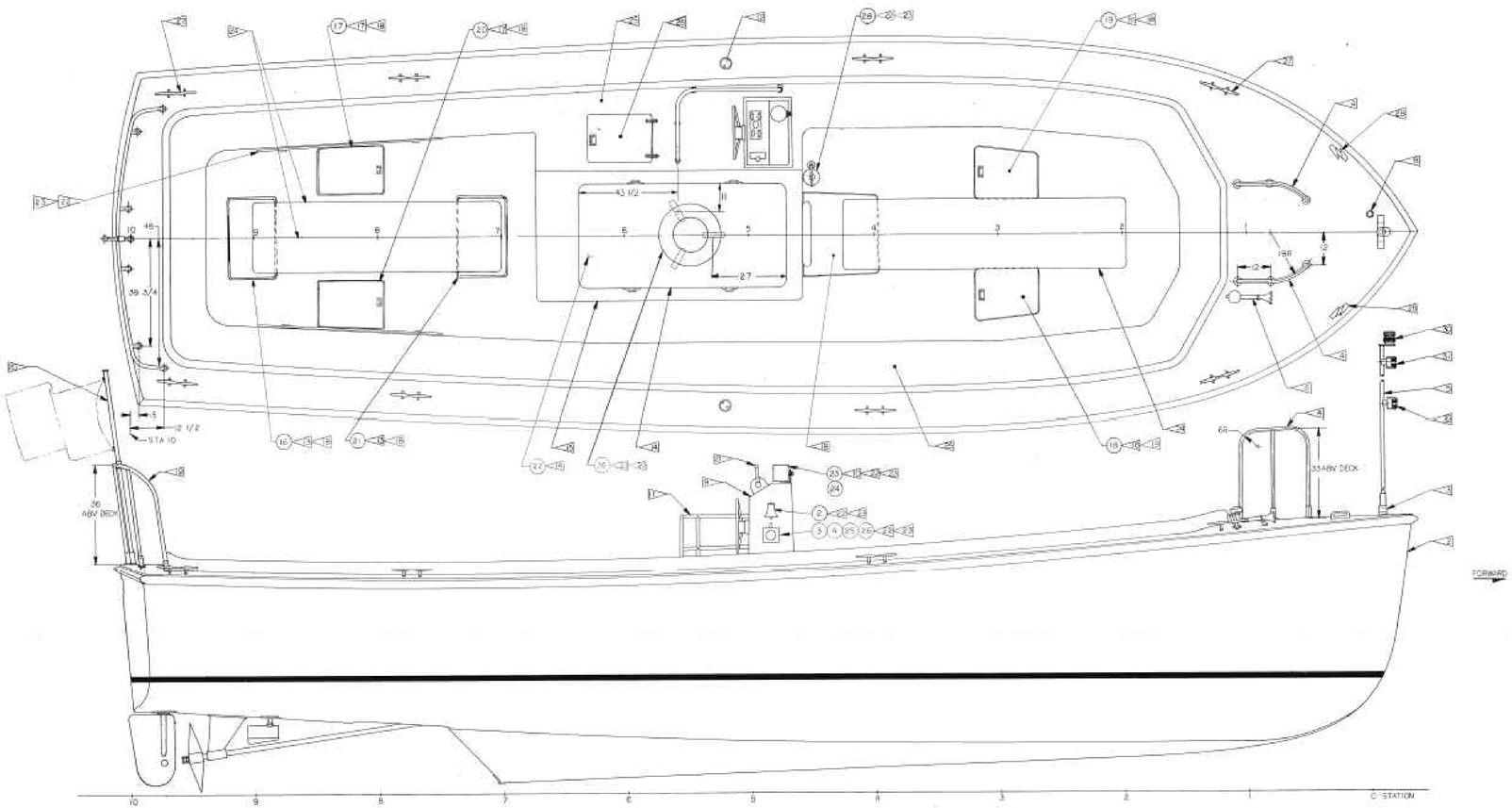

19—A
SCALE : NONE

101 5104246 2 B

H	53711	40 UB 101	5104246	B	

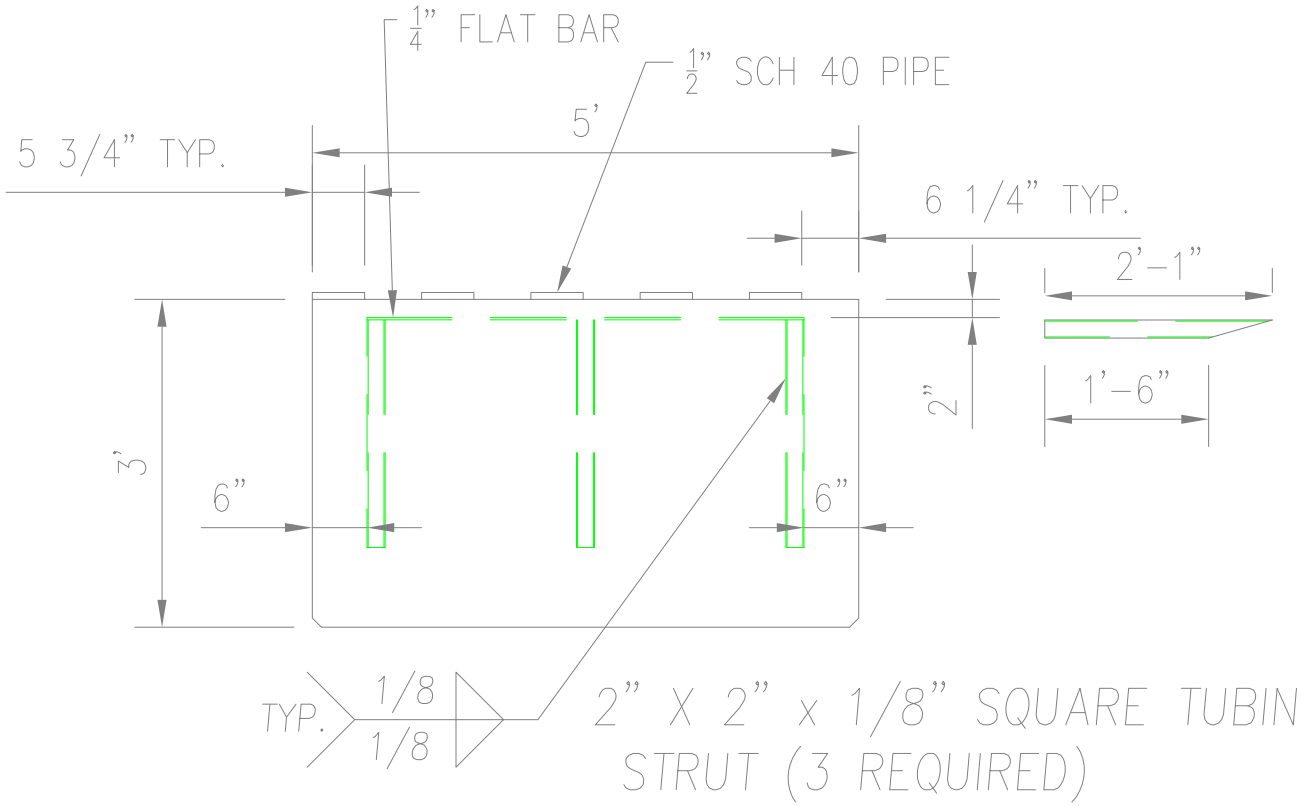
1/4" FLAT BAR
1/2" SCH 40 PIPE
5'
5 3/4" TYP.
6 1/4" TYP.
2'-1"
1'-6"
2"
3'
6"
6"
TYP.
1/8
1/8
2" X 2" x 1/8" SQUARE TUBING
STRUT (3 REQUIRED)

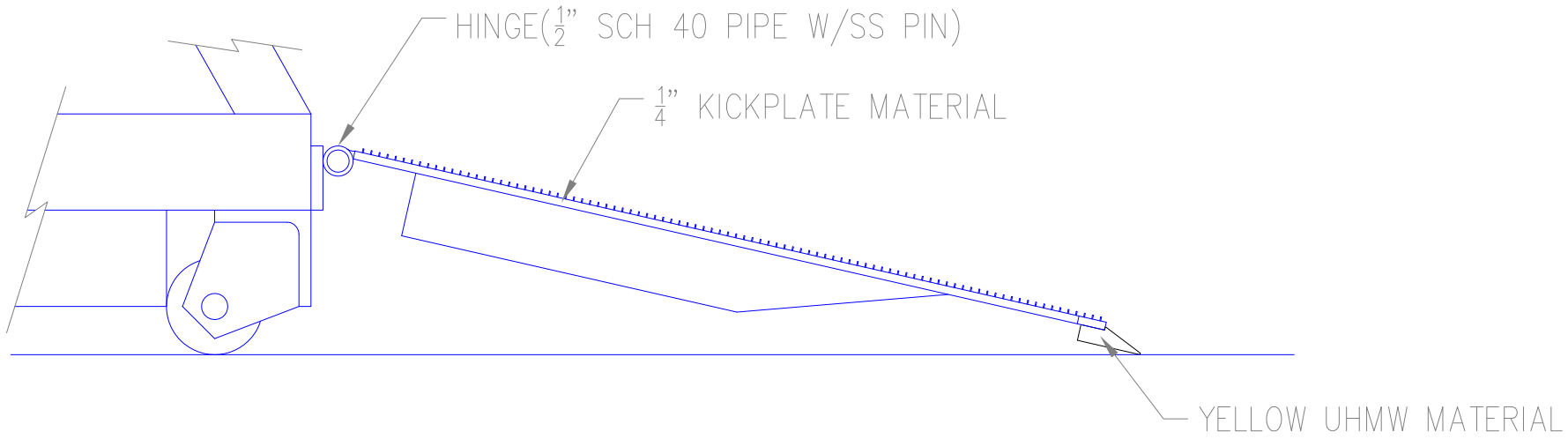
HINGE(1/2" SCH 40 PIPE W/SS PIN)
1/4" KICKPLATE MATERIAL
YELLOW UHMW MATERIAL

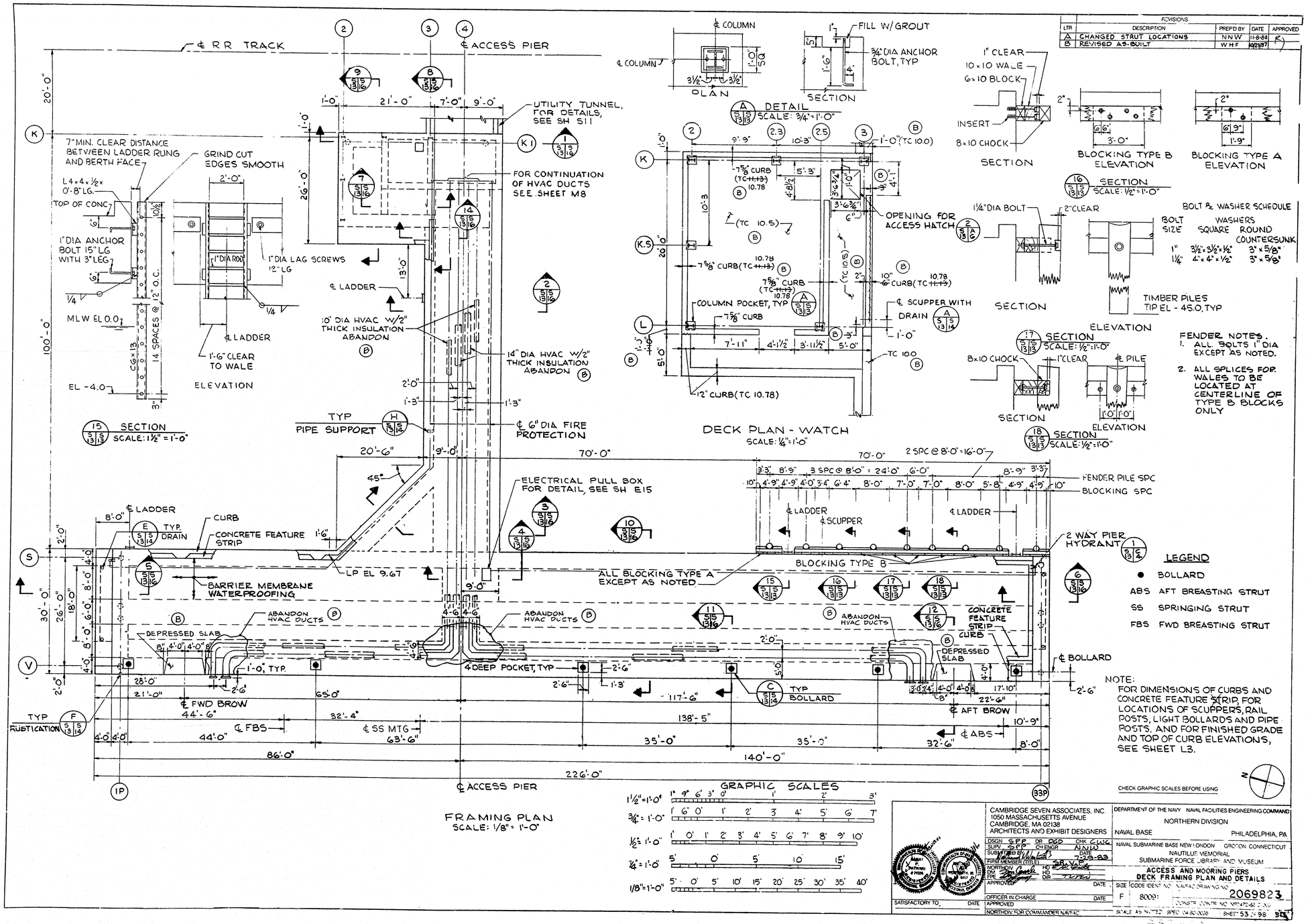

REVISIONS
LTR | DESCRIPTION | PREP'D BY | DATE | APPROVED
A | CHANGED STRUT LOCATIONS | NNW | 11-8-84
B | REVISED AS-BUILT | WHF | 10/23/87
℄ RR TRACK
℄ ACCESS PIER
UTILITY TUNNEL, FOR DETAILS, SEE SH S11
FOR CONTINUATION OF HVAC DUCTS SEE SHEET M8
7" MIN. CLEAR DISTANCE BETWEEN LADDER RUNG AND BERTH FACE
GRIND CUT EDGES SMOOTH
L 4x4x½x 0'-8" LG.
TOP OF CONC
1" DIA ANCHOR BOLT 15" LG WITH 3" LEG
1" DIA LAG SCREWS 12" LG
1" DIA ROD
℄ LADDER
1'-6" CLEAR TO WALE
ELEVATION
MLW EL 0.0
EL -4.0
14 SPACES @ 12" O.C.
SECTION SCALE: 1½" = 1'-0"
10" DIA HVAC W/2" THICK INSULATION ABANDON
14" DIA HVAC W/2" THICK INSULATION ABANDON
TYP PIPE SUPPORT
℄ 6" DIA FIRE PROTECTION
ELECTRICAL PULL BOX FOR DETAIL, SEE SH E15
℄ LADDER
TYP. DRAIN
CURB
CONCRETE FEATURE STRIP
BARRIER MEMBRANE WATERPROOFING
LP EL 9.67
ABANDON HVAC DUCTS
DEPRESSED SLAB
1'-0", TYP.
4 DEEP POCKET, TYP
℄ FWD BROW
TYP RUSTICATION
℄ FBS
℄ SS MTG
℄ ACCESS PIER
FRAMING PLAN SCALE: 1/8" = 1'-0"
℄ COLUMN
PLAN
FILL W/GROUT
¾" DIA ANCHOR BOLT, TYP
SECTION
DETAIL SCALE: ¾" = 1'-0"
OPENING FOR ACCESS HATCH
COLUMN POCKET, TYP
℄ SCUPPER WITH DRAIN
12" CURB (TC 10.78)
DECK PLAN - WATCH SCALE: ¼" = 1'-0"
1" CLEAR
10x10 WALE
6x10 BLOCK
INSERT
8x10 CHOCK
SECTION
BLOCKING TYPE B ELEVATION
BLOCKING TYPE A ELEVATION
SECTION SCALE: ½" = 1'-0"
1¼" DIA BOLT
2" CLEAR
TIMBER PILES TIP EL - 45.0, TYP
ELEVATION
SECTION SCALE: ½" = 1'-0"
8x10 CHOCK
1" CLEAR
℄ PILE
SECTION SCALE: ½" = 1'-0"
BOLT & WASHER SCHEDULE
BOLT SIZE | WASHERS SQUARE | ROUND COUNTERSUNK
1" | 3½"x3½"x½" | 3"x5/8"
1¼" | 4"x4"x½" | 3"x5/8"
FENDER NOTES.
1. ALL BOLTS 1" DIA EXCEPT AS NOTED.
2. ALL SPLICES FOR WALES TO BE LOCATED AT CENTERLINE OF TYPE B BLOCKS ONLY
2 SPC @ 8'-0" = 16'-0"
3 SPC @ 8'-0" = 24'-0"
FENDER PILE SPC
BLOCKING SPC
℄ LADDER
℄ SCUPPER
2 WAY PIER HYDRANT
BLOCKING TYPE B
ALL BLOCKING TYPE A EXCEPT AS NOTED
CONCRETE FEATURE STRIP
CURB
DEPRESSED SLAB
℄ BOLLARD
TYP BOLLARD
℄ AFT BROW
℄ ABS
LEGEND
● BOLLARD
ABS AFT BREASTING STRUT
SS SPRINGING STRUT
FBS FWD BREASTING STRUT
NOTE: FOR DIMENSIONS OF CURBS AND CONCRETE FEATURE STRIP, FOR LOCATIONS OF SCUPPERS, RAIL POSTS, LIGHT BOLLARDS AND PIPE POSTS, AND FOR FINISHED GRADE AND TOP OF CURB ELEVATIONS, SEE SHEET L3.
GRAPHIC SCALES
1½" = 1'-0"
¾" = 1'-0"
½" = 1'-0"
¼" = 1'-0"
1/8" = 1'-0"
CHECK GRAPHIC SCALES BEFORE USING
CAMBRIDGE SEVEN ASSOCIATES, INC.
1050 MASSACHUSETTS AVENUE
CAMBRIDGE, MA 02138
ARCHITECTS AND EXHIBIT DESIGNERS
DEPARTMENT OF THE NAVY NAVAL FACILITIES ENGINEERING COMMAND
NORTHERN DIVISION
NAVAL BASE PHILADELPHIA, PA
NAVAL SUBMARINE BASE NEW LONDON GROTON CONNECTICUT
NAUTILUS MEMORIAL
SUBMARINE FORCE LIBRARY AND MUSEUM
ACCESS AND MOORING PIERS
DECK FRAMING PLAN AND DETAILS
SIZE F
CODE IDENT NO 80091
NAVFAC DRAWING NO 2069823
SHEET 53 OF 98
SATISFACTORY TO
DATE
APPROVED
OFFICER IN CHARGE
NORTHDIV FOR COMMANDER NAVFAC
TG-017A-19

REVISIONS				
LTR	DESCRIPTION	PREP'D BY	DATE	APPROVED
A	RELOCATED STRUTS & UTILITY LINES	NNW	11-8-84	
	AS BUILT	WMF	4/5/85	

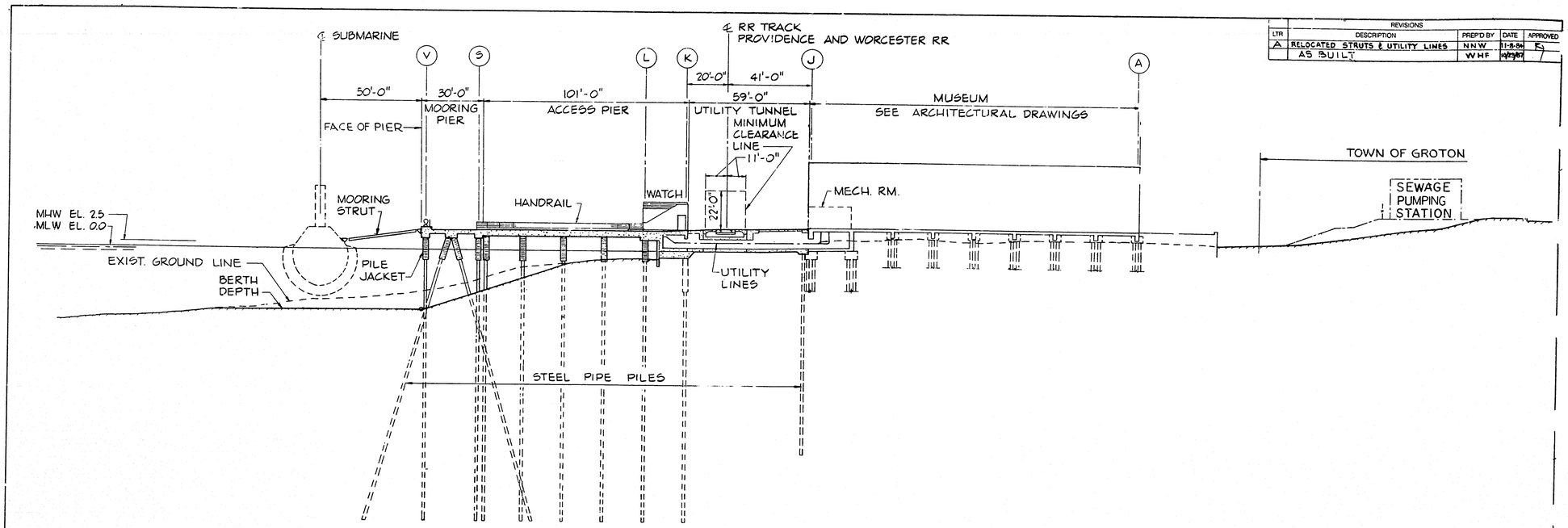

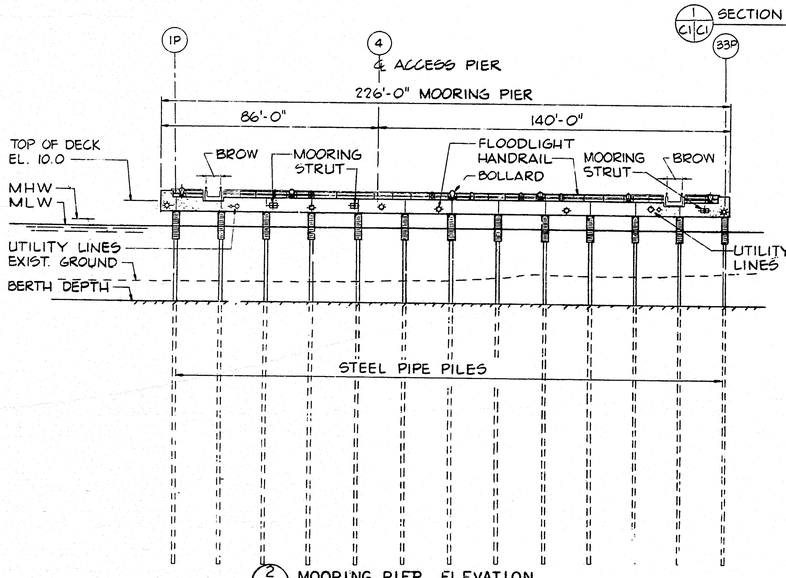

1 C1|C1 SECTION ℄ ACCESS PIER - LINE 4

2 C1|C1 MOORING PIER ELEVATION

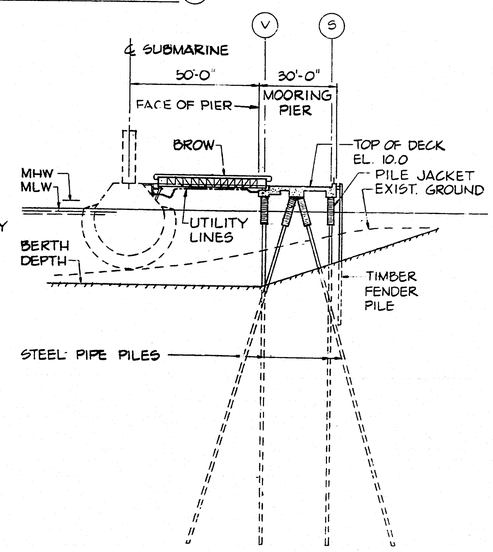

3 C1|C1 SECTION - MOORING PIER

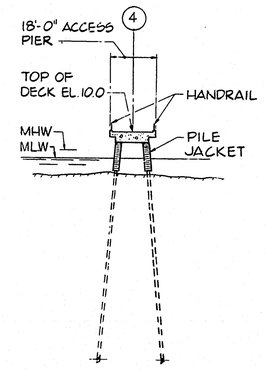

4 C1|C1 SECTION - ACCESS PIER

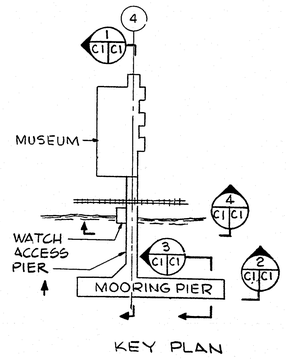

KEY PLAN

GRAPHIC SCALE
1"=20' 25' 0' 25' 50' 75'

CHECK GRAPHIC SCALES BEFORE USING

CAMBRIDGE SEVEN ASSOCIATES, INC. 1050 MASSACHUSETTS AVENUE CAMBRIDGE, MA 02138 ARCHITECTS AND EXHIBIT DESIGNERS	DEPARTMENT OF THE NAVY NAVAL FACILITIES ENGINEERING COMMAND NORTHERN DIVISION NAVAL BASE PHILADELPHIA, PA
DSGN ABB DR MVF CHK JGB SURV NNW CHENGR NNW SUBMITTED BY [signature] DATE 7-29-85 FIRM MEMBER (TITLE) [signature] NORTHDIV [signature] HD [signature] OM [signature] HD [signature] EFD [signature] DIR [signature] APPROVED DATE	NAVAL SUBMARINE BASE NEW LONDON, GROTON, CONNECTICUT NAUTILUS MEMORIAL SUBMARINE FORCE LIBRARY AND MUSEUM GENERAL SECTIONS PIERS AND RAILROAD CROSSING
OFFICER IN CHARGE DATE APPROVED NORTHDIV FOR COMMANDER NAVFAC	SIZE .F CODE IDENT NO. 80091 NAVFAC DRAWING NO. 2069772 CONSTR. CONTR. NO. N62472-82-C-0035 SCALE 1"= 20' SPEC. 04-82-0035 SHEET 2 OF 98

SATISFACTORY TO DATE

TF:-0-174-1

B571-8

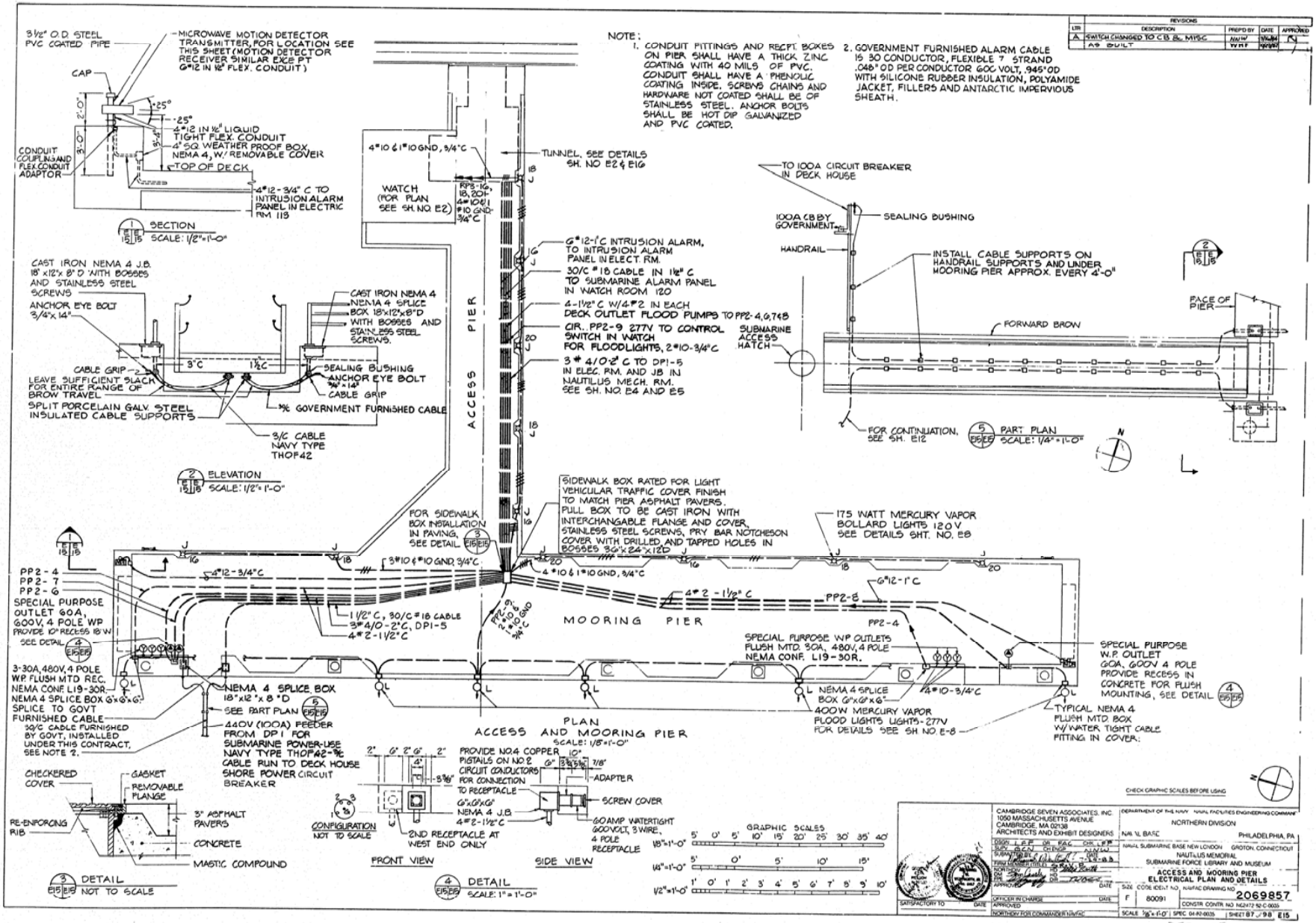
NOTE:
1. CONDUIT FITTINGS AND RECPT BOXES ON PIER SHALL HAVE A THICK ZINC COATING WITH 40 MILS OF PVC. CONDUIT SHALL HAVE A PHENOLIC COATING INSIDE. SCREWS CHAINS AND HARDWARE NOT COATED SHALL BE OF STAINLESS STEEL. ANCHOR BOLTS SHALL BE HOT DIP GALVANIZED AND PVC COATED.
2. GOVERNMENT FURNISHED ALARM CABLE IS 30 CONDUCTOR, FLEXIBLE 7 STRAND .048" OD PER CONDUCTOR 600 VOLT, .945" OD WITH SILICONE RUBBER INSULATION, POLYAMIDE JACKET, FILLERS AND ANTARCTIC IMPERVIOUS SHEATH.
REVISIONS
LTR DESCRIPTION PREPD BY DATE APPROVED
A SWITCH CHANGED TO CB &, MISC NAIW 7/6/94
AS BUILT WHF 10/2/97
3½" O.D. STEEL PVC COATED PIPE
MICROWAVE MOTION DETECTOR TRANSMITTER, FOR LOCATION SEE THIS SHEET (MOTION DETECTOR RECEIVER SIMILAR EXCEPT 6"#12 IN ½" FLEX. CONDUIT)
CAP
4"#12 IN ½" LIQUID TIGHT FLEX. CONDUIT
4" SQ WEATHER PROOF BOX NEMA 4, W/ REMOVABLE COVER
TOP OF DECK
CONDUIT COUPLING AND FLEX CONDUIT ADAPTOR
4"#12 - 3/4" C TO INTRUSION ALARM PANEL IN ELECTRIC RM 113
SECTION
SCALE: 1/2"=1'-0"
CAST IRON NEMA 4 J.B. 18" x12"x 8" D WITH BOSSES AND STAINLESS STEEL SCREWS
ANCHOR EYE BOLT 3/4"x 14"
CAST IRON NEMA 4 SPLICE BOX 18"x12"x8"D WITH BOSSES AND STAINLESS STEEL SCREWS.
CABLE GRIP
LEAVE SUFFICIENT SLACK FOR ENTIRE RANGE OF BROW TRAVEL
SEALING BUSHING
ANCHOR EYE BOLT 3/4" x 14"
CABLE GRIP
SPLIT PORCELAIN GALV STEEL INSULATED CABLE SUPPORTS
⅜ GOVERNMENT FURNISHED CABLE
3/C CABLE NAVY TYPE THOF42
ELEVATION
SCALE: 1/2"=1'-0"
4"#10 & 1"#10 GND, 3/4"C
TUNNEL, SEE DETAILS SH. NO E2 & E16
WATCH (FOR PLAN SEE SH. NO E2)
RPS-16, 18, 20 1 4"#10 & 1 #10 GND 3/4"C
ACCESS PIER
6"#12-1"C INTRUSION ALARM, TO INTRUSION ALARM PANEL IN ELECT. RM.
30/C #18 CABLE IN 1½" C TO SUBMARINE ALARM PANEL IN WATCH ROOM 120
4-1½" C W/4"#2 IN EACH DECK OUTLET FLOOD PUMPS TO PP2-4,6,7&8
CIR. PP2-9 277V TO CONTROL SWITCH IN WATCH FOR FLOODLIGHTS, 2"#10-3/4"C
3"#4/0-2"C TO DP1-5 IN ELEC. RM. AND JB IN NAUTILUS MECH. RM. SEE SH. NO. E4 AND E5
TO 100A CIRCUIT BREAKER IN DECK HOUSE
100A CB BY GOVERNMENT
SEALING BUSHING
HANDRAIL
INSTALL CABLE SUPPORTS ON HANDRAIL SUPPORTS AND UNDER MOORING PIER APPROX. EVERY 4'-0"
FACE OF PIER
FORWARD BROW
SUBMARINE ACCESS HATCH
FOR CONTINUATION, SEE SH. E12
PART PLAN
SCALE: 1/4"=1'-0"
SIDEWALK BOX RATED FOR LIGHT VEHICULAR TRAFFIC COVER FINISH TO MATCH PIER ASPHALT PAVERS. PULL BOX TO BE CAST IRON WITH INTERCHANGABLE FLANGE AND COVER. STAINLESS STEEL SCREWS, PRY BAR NOTCHES ON COVER WITH DRILLED AND TAPPED HOLES IN BOSSES 36"x 24"x 12"D
FOR SIDEWALK BOX INSTALLATION IN PAVING, SEE DETAIL
175 WATT MERCURY VAPOR BOLLARD LIGHTS 120 V SEE DETAILS SHT. NO. E8
3"#10 & 1"#10 GND, 3/4"C
4"#10 & 1"#10 GND, 3/4"C
4"#2 - 1½"C
6"#12-1"C
PP2-8
PP2-4
PP2-4
PP2-7
PP2-6
SPECIAL PURPOSE OUTLET 60A, 600V, 4 POLE WP PROVIDE 10" RECESS 18" W SEE DETAIL
1 1/2" C, 30/C #18 CABLE
3"#4/0-2"C, DP1-5
4"#2-1 1/2"C
PP2-9 2"#10 & 1"#10 GND 3/4"C
MOORING PIER
SPECIAL PURPOSE WP OUTLETS FLUSH MTD. 30A, 480V, 4 POLE NEMA CONF. L19-30R.
SPECIAL PURPOSE W.P. OUTLET 60A, 600V 4 POLE PROVIDE RECESS IN CONCRETE FOR FLUSH MOUNTING, SEE DETAIL
3-30A, 480V, 4 POLE W.P. FLUSH MTD REC. NEMA CONF. L19-30R
NEMA 4 SPLICE BOX 6"x6"x6"
SPLICE TO GOVT FURNISHED CABLE
3⅜ CABLE FURNISHED BY GOVT, INSTALLED UNDER THIS CONTRACT, SEE NOTE 2.
NEMA 4 SPLICE BOX 18"x12"x 8"D
SEE PART PLAN
440V (100A) FEEDER FROM DP1 FOR SUBMARINE POWER-USE NAVY TYPE THOF42-⅜ CABLE RUN TO DECK HOUSE SHORE POWER CIRCUIT BREAKER
NEMA 4 SPLICE BOX 6"x6"x6"
400W MERCURY VAPOR FLOOD LIGHTS LIGHTS-277V FOR DETAILS SEE SH NO E-8
TYPICAL NEMA 4 FLUSH MTD BOX W/ WATER TIGHT CABLE FITTING IN COVER.
PLAN
ACCESS AND MOORING PIER
SCALE: 1/8"=1'-0"
CHECKERED COVER
GASKET
REMOVABLE FLANGE
3" ASPHALT PAVERS
RE-ENFORCING RIB
CONCRETE
MASTIC COMPOUND
DETAIL
NOT TO SCALE
PROVIDE NO.4 COPPER PIGTAILS ON NO.2 CIRCUIT CONDUCTORS FOR CONNECTION TO RECEPTACLE
ADAPTER
SCREW COVER
6"x6"x6" NEMA 4 J.B. 4"#2-1½"C
60 AMP WATERTIGHT 600VOLT, 3 WIRE, 4 POLE RECEPTACLE
2ND RECEPTACLE AT WEST END ONLY
CONFIGURATION NOT TO SCALE
FRONT VIEW
SIDE VIEW
DETAIL
SCALE: 1"=1'-0"
GRAPHIC SCALES
1/8"=1'-0"
1/4"=1'-0"
1/2"=1'-0"
CHECK GRAPHIC SCALES BEFORE USING
CAMBRIDGE SEVEN ASSOCIATES, INC. 1050 MASSACHUSETTS AVENUE CAMBRIDGE, MA 02138 ARCHITECTS AND EXHIBIT DESIGNERS
DEPARTMENT OF THE NAVY NAVAL FACILITIES ENGINEERING COMMAND
NORTHERN DIVISION
NAVAL BASE PHILADELPHIA, PA
NAVAL SUBMARINE BASE NEW LONDON GROTON, CONNECTICUT
NAUTILUS MEMORIAL SUBMARINE FORCE LIBRARY AND MUSEUM
ACCESS AND MOORING PIER ELECTRICAL PLAN AND DETAILS
SIZE CODE IDENT NO. NAVFAC DRAWING NO. 2069857
F 80091
CONSTR CONTR NO N62472-92-C-0035
SCALE 3/8"=1'-0" SPEC 04-92-0035 SHEET 87 OF 98 E15
DESIGN L.F.F. DR F.A.C. CHK L.F.F.
DETAIL G.E.N. CHK D.P.C. A.J.V.M.
SURVEY DATE
TURN OVER DATE
NORTHDIV DATE
OIC DATE
APPROVED DATE
OFFICER IN CHARGE DATE
APPROVED
NORTHDIV FOR COMMANDER NAVFAC
SATISFACTORY TO DATE
YG-017A-53
857-05

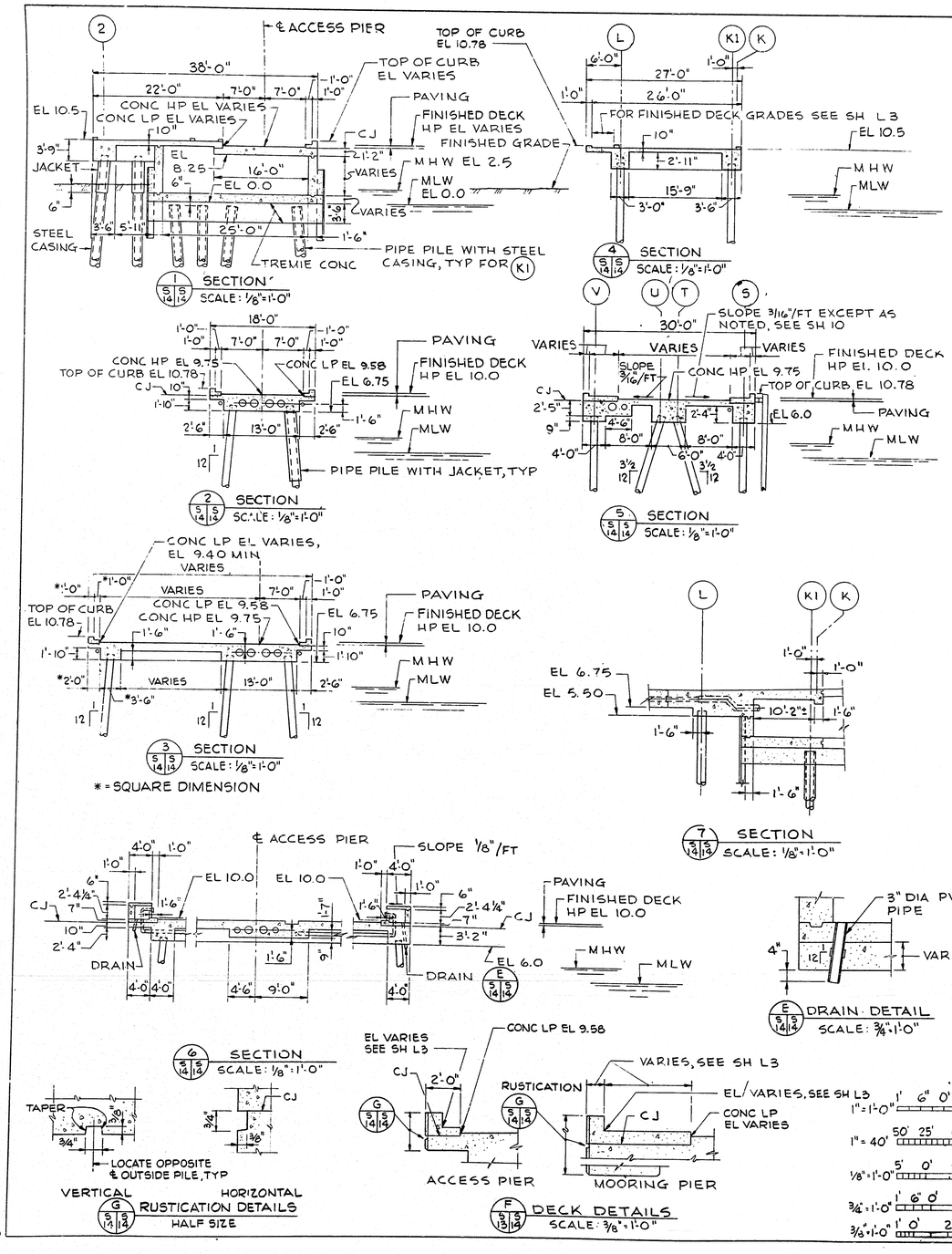

REVISIONS				
LTR	DESCRIPTION	PREP'D BY	DATE	APPROVED
	AS BUILT	WHF	4/23/87	

CAMBRIDGE SEVEN ASSOCIATES, INC
1050 MASSACHUSETTS AVENUE
CAMBRIDGE, MA 02138
ARCHITECTS AND EXHIBIT DESIGNERS

DEPARTMENT OF THE NAVY NAVAL FACILITIES ENGINEERING COMMAND
NORTHERN DIVISION
NAVAL BASE PHILADELPHIA, PA
NAVAL SUBMARINE BASE NEW LONDON GROTON CONNECTICUT
NAUTILUS MEMORIAL
SUBMARINE FORCE LIBRARY AND MUSEUM

ACCESS AND MOORING PIERS
DECK SECTIONS AND DETAILS

DES SPE DR RB CHK CWC
SUPV SPE CH ENGR N.M.W.
SUBMITTED DATE 7-20-87
FIRM MEMBER (TITLE)
NORTHDIV DATE
OM DATE
SPE DATE
APPROVED DATE
OFFICER IN CHARGE DATE
APPROVED
NORTHDIV FOR COMMANDER NAVFAC

SATISFACTORY TO DATE

S.F. CODE IDENT NO/ NAVFAC DRAWING NO
2069824
F 80091
CONSTR CONTR NO N62472-82-C-0035
SCALE AS NOTED SPEC 04-82-0035 SHEET 54 OF 98 814

BS71-61

FG-0174-20

MARINA

REVISIONS				
LTR	DESCRIPTION	PREP'D BY	DATE	APPROVED
A	AMENDMENT NO 0001	N N W	8/30/83	
	'AS BUILT'	W H F	10/23/87	

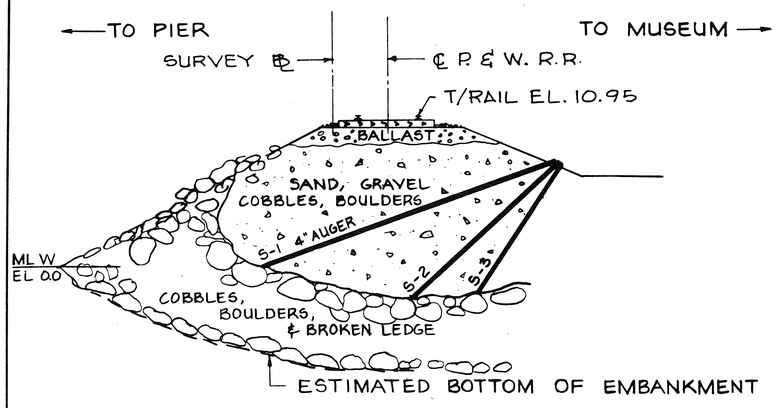

SUBSURFACE INFORMATION AT R.R. CROSSING
SCALE: 1" = 5'

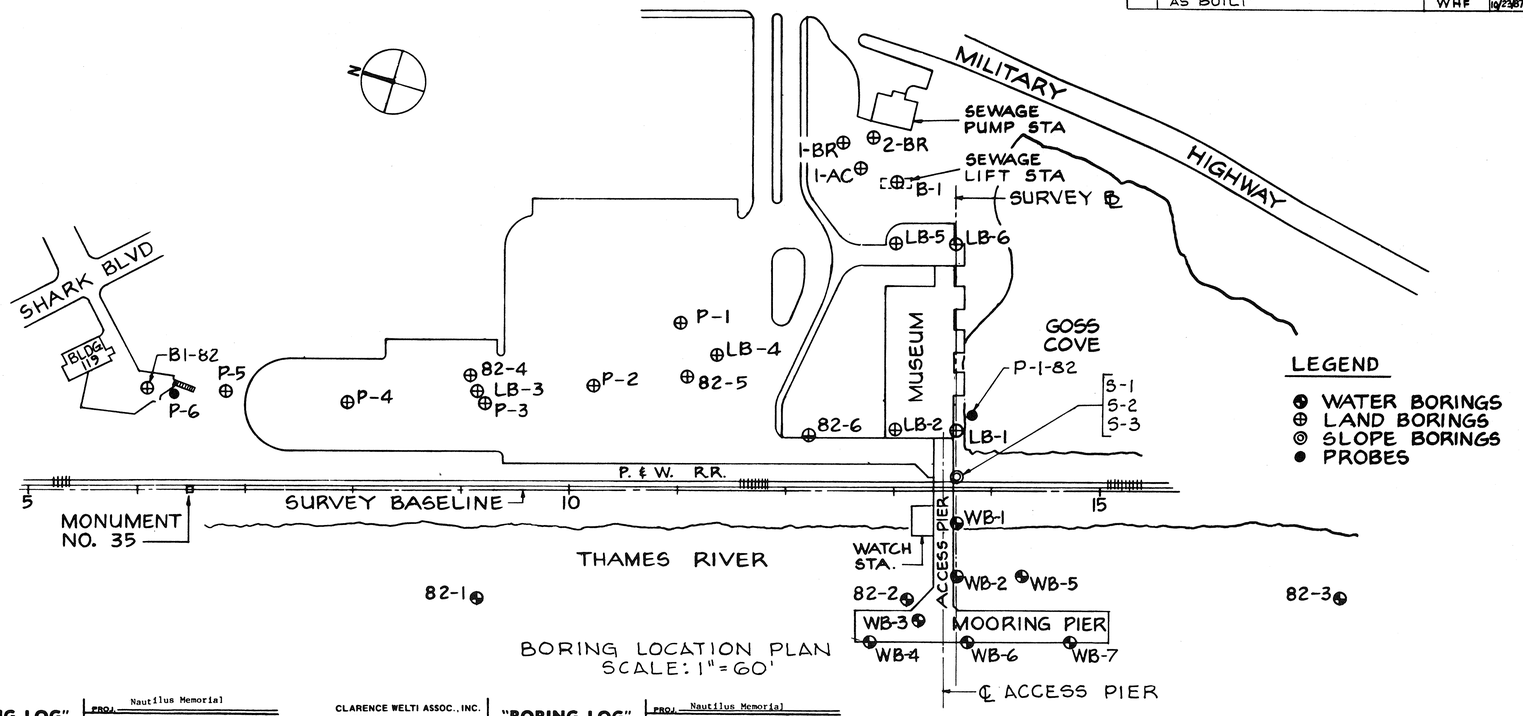

BORING LOCATION PLAN
SCALE: 1" = 60'

LEGEND
- WATER BORINGS
- LAND BORINGS
- SLOPE BORINGS
- PROBES

CLARENCE WELTI ASSOC., INC.
P.O.BOX 397
GLASTONBURY, CONN. 06033

"BORING LOG"

PROJ. Nautilus Memorial
CLIENT FAY, SPOFFORD & THORNDIKE

BORING NO. P-1
LINE & STA.
OFFSET
GR. ELEV. 9±

A	STRATUM DESCRIPTION	BLOWS PER	B
	gravel, fill		
4.0	AUGER REFUSAL AT 4.0 NO WATER @ 0 hrs. DATE: 5/31/83 DRILLER: BROMLEY 4" AUGER BORING		

BORING NO. P-2
LINE & STA.
OFFSET
GR. ELEV. 9±

A	STRATUM DESCRIPTION	BLOWS PER	B
	gravel, fill		
4.0	AUGER REFUSAL AT 4.0 NO WATER @ 0 hrs. DATE: 5/31/83 DRILLER: BROMLEY 4" AUGER BORING		

Trio Printers # 1127

1. COL. A strata depth
2. COL. B
3. HAMMER = 140#; FALL 30"
4. SAMPLER = O.D. SPLIT SPOON
5. GWT = GROUND WATER

AND - 40 to 50%
SOME - 10 to 40%
TRACE - 0 to 10%

CLARENCE WELTI ASSOC., INC.
P.O.BOX 397
GLASTONBURY, CONN. 06033

"BORING LOG"

PROJ. Nautilus Memorial
CLIENT FAY, SPOFFORD & THORNDIKE

BORING NO. P-3
LINE & STA.
OFFSET
GR. ELEV. 10±

A	STRATUM DESCRIPTION	BLOWS PER	B
	gravel, fill		
4.0	blk.fine-med.sand, some wire,wood, cinders,etc.		
10.0	BOTTOM OF BORING 10.0 WATER AT 6.5' @ 0 hrs. DATE: 5/31/83 DRILLER: BROMLEY 4" AUGER BORING		

BORING NO. P-4
LINE & STA.
OFFSET
GR. ELEV. 11±

A	STRATUM DESCRIPTION	BLOWS PER	B
2.0	gravel,fill		
5.0	drk.br.fine-med.sand & gravel,fill		
10.0	blk.fill,fine-med. sand,cinders,metal, bricks,glass		
	BOTTOM OF BORING 10.0 DATE: 5/31/83 DRILLER:BROMLEY 4" AUGER BORING		

Trio Printers # 1127

1. COL. A strata depth
2. COL. B
3. HAMMER = 140#; FALL 30"
4. SAMPLER = O.D. SPLIT SPOON
5. GWT = GROUND WATER

AND - 40 to 50%
SOME - 10 to 40%
TRACE - 0 to 10%

CLARENCE WELTI ASSOC., INC.
P.O.BOX 397
GLASTONBURY, CONN. 06033

"BORING LOG"

PROJ. Nautilus Memorial
CLIENT FAY, SPOFFORD & THORNDIKE

BORING NO. P-5
LINE & STA.
OFFSET
GR. ELEV. 12.5±

A	STRATUM DESCRIPTION	BLOWS PER	B
2.0	gravel,fill		
	gravel, sand,bricks, wire, metal,glass		
10.0	BOTTOM OF BORING 10.0 WATER AT 8' @ 0 hrs. DATE: 5/31/83 DRILLER: BROMLEY 4" AUGER BORING		

BORING NO. P-6
LINE & STA.
OFFSET
GR. ELEV. 19±

A	STRATUM DESCRIPTION	BLOWS PER	B
	HAND PROBE		
	REFUSAL AT 5.5' NO WATER @ 0 hrs. DATE: 5/31/83 DRILLER: BROMLEY		

Trio Printers # 1127

1. COL. A strata depth
2. COL. B
3. HAMMER = 140#; FALL 30"
4. SAMPLER = O.D. SPLIT SPOON
5. GWT = GROUND WATER

AND - 40 to 50%
SOME - 10 to 40%
TRACE - 0 to 10%

CLARENCE WELTI ASSOC., INC.
P.O.BOX 397
GLASTONBURY, CONN. 06033

"BORING LOG"

PROJ. Nautilus Memorial
CLIENT FAY, SPOFFORD & THORNDIKE

BORING NO. B-1
LINE & STA.
OFFSET
GR. ELEV. 8.0±

A	STRATUM DESCRIPTION	BLOWS PER	B
	fill, large blasted rock fill with cra-fine gravel		
7.0	AUGER REFUSAL REFUSAL AT 7.0' WATER AT 4' @ 0 hrs. TWO OTHER ATTEMPTS REFUSAL AT 6.0', 3.0' DATE: 5/31/83 DRILLER: BROMLEY HOLLOW STEM AUGER	BORING	

BORING NO.
LINE & STA.
OFFSET
GR. ELEV.

A	STRATUM DESCRIPTION	BLOWS PER	B

Trio Printers # 1127

1. COL. A strata depth
2. COL. B
3. HAMMER = 140#; FALL 30"
4. SAMPLER = O.D. SPLIT SPOON
5. GWT = GROUND WATER

AND - 40 to 50%
SOME - 10 to 40%
TRACE - 0 to 10%

CLARENCE WELTI ASSOC., INC.
P.O.BOX 397
GLASTONBURY, CONN. 06033

"BORING LOG"

PROJ. Proposed Tower/Subbase
CLIENT HERMANN & JONCUS

BORING NO. B-1-82 (behind Bldg.#119)
LINE & STA.
OFFSET
GR. ELEV. 25+ (See Note A)

A	STRATUM DESCRIPTION	BLOWS PER 6"	B
0.1	~~ASPHALT~~		
1.5	** fine gravel, tr. gr/br.fine sand,tr. silt,fill	5-10-12	
7.0	*** SM		
9.0	**br/gr.silt, tr.fine sand ***br/gr.fine sand, little silt,tr.fine gravel AUGER REFUSAL AT 9.0 AUGER MOIST @ 9' @ 0 hrs. DATE: 5/18/82 DRILLER: URSIN		

BORING NO.
LINE & STA.
OFFSET
GR. ELEV.

A	STRATUM DESCRIPTION	BLOWS PER	B
	NOTE A APPROX. ELEV. BY F.S.& T. FROM SUB BASE DWGS.		

Trio Printers # 1127

1. COL. A strata depth
2. COL. B
3. HAMMER = 140#; FALL 30"
4. SAMPLER = O.D. SPLIT SPOON
5. GWT = GROUND WATER

AND - 40 to 50%
SOME - 10 to 40%
TRACE - 0 to 10%

NOTES:

1. LB-1 THRU LB-6, WB-1 THRU WB-7, P-6, AND B-1 DRILLED BETWEEN FEBRUARY AND MAY 1983
2. 82-1 THRU 82-6 AND P-1-82 DRILLED APRIL AND MAY 1982
3. 1-BR, 2-BR, AND 1-AC (REFERENCE BORINGS) DRILLED NOVEMBER 1969
   A. BORINGS TAKEN PRIOR TO CONSTRUCTION OF TOWN SEWAGE PUMPING STATION AND PLACEMENT OF FILL
   B. BORING LOG ELEVATIONS REFER TO TOWN OF GROTON BASE MEAN SEA LEVEL, ELEVATIONS SHOWN IN PARENTHESIS WERE CONVERTED TO MEAN LOW WATER DATUM
4. B-1-82 (REFERENCE BORING) DRILLED MAY 1982 FOR CONSTUCTION OF TOWER

GRAPHIC SCALES

1" = 60' 50' 0' 50' 100' 150' 200' 250'

1" = 5' 5' 0' 5' 10' 15' 20'

BORING LOCATIONS

BORING	STATION	OFFSET	BORING	STATION	OFFSET
WB-1	13+57	W 35	P-1	11+05	E 150
WB-2	13+57	W 85	P-2	10+25	E 90
WB-3	13+22	W 125	P-3	9+25	E 75
WB-4	12+72	W 150	P-4	7+95	E 75
WB-5	14+17	W 86	P-5	6+85	E 90
WB-6	13+65	W 150	P-6	6+45	E 90
WB-7	14+62	W 150	82-1	9+15	W 100
LB-1	13+65	E 50	82-2	13+10	W 100
LB-2	13+05	E 50	82-3 (1)	17+13	W 90
LB-3	9+17	E 85	82-4	9+10	E 100
LB-4	11+37	E 120	82-5	11+10	E 100
LB-5	13+05	E 220	82-6	12+20	E 45
LB-6	13+65	E 220	B-1-82	5+87	E 83
1-BR	12+55	E 320	P-1-82	13+75	E 65
2-BR	12+80	E 320	1-AC	12+70	E 295
			B-1	13+05	E 280

OFFSETS ARE MEASURED FROM ℄ RR TRACK

(1) STATIONS ARE MEASURED FROM SURVEY BASELINE WHICH IS 5.24 FT WEST OF ℄ RR TRACK EXCEPT AT BORING 82-3, SURVEY BASELINE IS 5.00 FT EAST OF ℄ RR TRACK

RECEIVED, P M
SEP 23 '88
F.S.&T., INC.

CHECK GRAPHIC SCALES BEFORE USING

CAMBRIDGE SEVEN ASSOCIATES, INC.
1050 MASSACHUSETTS AVENUE
CAMBRIDGE, MA 02138
ARCHITECTS AND EXHIBIT DESIGNERS

DEPARTMENT OF THE NAVY NAVAL FACILITIES ENGINEERING COMMAND
NORTHERN DIVISION
NAVAL BASE PHILADELPHIA, PA

DSGN DR PCS CHK RHS/WB
SUPV NNW CH ENGR NNW
SUBMITTED BY DATE 7-25-83
FIRM MEMBER (TITLE)
NORTHDIV HD
DM HD
FPE HD
APPROVED DATE
OFFICER IN CHARGE DATE
SATISFACTORY TO DATE
APPROVED
NORTHDIV FOR COMMANDER NAVFAC

NAVAL SUBMARINE BASE NEW LONDON GROTON, CONNECTICUT
NAUTILUS MEMORIAL
SUBMARINE FORCE LIBRARY AND MUSEUM

BORING LOCATION PLAN

SIZE F | CODE IDENT. NO. 80091 | NAVFAC DRAWING NO. 2071054
CONSTR. CONTR. NO. N62472-82-C-0035
SCALE AS NOTED | SPEC. 04-82-0035 | SHEET 94 OF 98 | CBI

REVISIONS				
LTR	DESCRIPTION	PREP'D BY	DATE	APPROVED
	AS BUILT	WHF	10/23/87	

CLARENCE WELTI ASSOC., INC.
P.O.BOX 397
GLASTONBURY, CONN. 06033

"BORING LOG"

PROJ. Nautilus; Groton, CT.
CLIENT FAY,SPOFFORD & THORNDIKE

BORING NO. WB-1
LINE & STA.
[redacted] (6' of water)
GR. ELEV. -5.0 (Mudline)

split spoon / U.P. sample / Rock

A	STRATUM DESCRIPTION	BLOWS PER 6"	B
1	br.fine-crs.sand & organic silt	push	
1			
2			
3			4.0
1			5.0
	gr.marine silt, tr.shells	push	
-			
1			
	OH		
			10.0
1		push	
1			15.0
		push	
1			
1			20.0
		push	
1			
1			
1			25.0
1		push	
1			
1			
1			
1			30.0
1		push	
1			
2			
1			
2			35.0
3		push	
3			37.0
22	gr.fine-crs.sand, little fine-crs. gravel,some shells	13-14-16	
28			
41			40.0
50			
57			
61	SW		
74			
85			45.0

BORING NO.
LINE & STA.
OFFSET
GR. ELEV.

A	STRATUM DESCRIPTION	BLOWS PER	B
55	gr/br.fine-crs. sand,some silt	10-8-10	
54			
52			
51			
62		7-9-10-8	50.0
55			
60			
60			
58			
57	SM		55.0
65		9-12-11	
70			
85			
85			
88			60.0
90			
92		10-9-12	
95			
96			64.0
92			65.0
90	gr.fine sand, some silt	4-6-6	
96			
101			
105			
100	SM		70.0
99		4-5-6	
108			
104			
120			
115			75.0
125		4-5-6	
121			
127			
118			
120			80.0
128		4-6-6	
131			
127			
130			
125		5-6-5-6	85.0
122			
127			
131			
126			
137		6-7-7-8	90.0

1. COL. A casing blows/FT. (300#,24" drop)
2. COL. B strata depth
3. HAMMER = 140#; FALL 30"
4. SAMPLER = 2" O.D. SPLIT SPOON
5. GWT = GROUND WATER

AND - 40 to 50%
SOME - 10 to 40%
TRACE - 0 to 10%

Trio Printers # 1127

CLARENCE WELTI ASSOC., INC.
P.O.BOX 397
GLASTONBURY, CONN. 06033

"BORING LOG"

PROJ. Nautilus; Groton, CT.
CLIENT FAY,SPOFFORD & THORNDIKE

BORING NO. WB-2
LINE & STA.
[redacted] (8.5' water)
GR. ELEV. -7.9 (Mudline)

split spoon / U.P. sample / Rock

A	STRATUM DESCRIPTION	BLOWS PER 6"	B
1	gr.organic silt, tr.shells	push	
1			5.0
1		push	
1			
1	U.P.#1 10'-12' rec.16"		10.0
1			
	OH		
1			15.0
		push	
1			
1	U.P. #2 20'-22' rec.23"		20.0
1			
1			
1			25.0
1		push	
1			
2			
2			
2	U.P.#3 30'-32' rec.23"		30.0
1			
1			
1			
1			
1			35.0
2		push	
1			
1			
2			
3			40.0
2		push	
2			42.0
31	gr/br.fine-crs. sand,some silt		
38			
34			45.0

BORING NO.
LINE & STA.
OFFSET
GR. ELEV.

A	STRATUM DESCRIPTION	BLOWS PER	B
35	gr/br.fiine-med. sand,some silt SM	8-11-14	
37			
35			48.0
37			
39			50.0
43	gr.fine-med.sand, some silt	6-6-7	
51			
48			
49			
59			55.0
63		5-6-6	
60			
61			
65			
68	SM		60.0
73		4-6-5	
78			
84			
80			
78			65.0
91		4-4-5	
87			
85			
87			
92			70.0
101		4-5-6	
108			
104			
117			
115			75.0
121		6-8-9	
130			
131			
132			
141			80.0
139		7-9-11	
148			
162			
174			
164			85.0
170		8-10-14	
175			
182			
191			
176			90.0

1. COL. A casing blows/FT. (300#,24" drop)
2. COL. B strata depth
3. HAMMER = 140#; FALL 30"
4. SAMPLER = 2" O.D. SPLIT SPOON
5. GWT = GROUND WATER

AND - 40 to 50%
SOME - 10 to 40%
TRACE - 0 to 10%

Trio Printers # 1127

CLARENCE WELTI ASSOC., INC.
P.O.BOX 397
GLASTONBURY, CONN. 06033

"BORING LOG"

PROJ. Nautilus; Groton, CT.
CLIENT FAY,SPOFFORD & THRONDIKE

BORING NO. WB-3
[redacted] (17' of water)
OFFSET
GR. ELEV. -17 (Mudline)

split spoon / U.P. sample / Rock

A	STRATUM DESCRIPTION	BLOWS PER 6"	B
1	black muck	push	
1	OH		5.0
		push	
1			
			10.0
		push	
1			12.0
	gr.organic silt, some shells		
1			15.0
		push	
1			
1			
1	OH		20.0
1		push	
1			
1			
1			25.0
1			
1			
1			
2			
1			30.0
2		push	
2			
2			
2			34.0
27			35.0
34	gr.fine-crs. sand,tr.fine gravel	18-18-12	
36			
45			
58			
60	SW		40.0
37		4-3-8	
39			
47			
45			
40			45.0

BORING NO.
LINE & STA.
OFFSET
GR. ELEV.

A	STRATUM DESCRIPTION	BLOWS PER	B
47	gr.fine-med. sand,some silt	4-4-5	
49			
45			
40			
46			50.0
42		4-5-6	
47			
46			
51			
57			55.0
62		5-5-6	
63			
71			
69	SM		
72			60.0
64		6-7-7	
68			
72			
75			
77			65.0
82		6-7-8	
84			
87			
92			
90			70.0
94		5-6-6	
92			
90			
90			
89			75.0
98		4-6-5	
94			
96			
95			
97			80.0
102		4-5-5	
114			
110			
112			
128			85.0
132		5-5-7	
128			
130			
138			
124			90.0

1. COL. A casing blows/FT. (300#,24" drop)
2. COL. B strata depth
3. HAMMER = 140#; FALL 30"
4. SAMPLER = 2" O.D. SPLIT SPOON
5. GWT = GROUND WATER

AND - 40 to 50%
SOME - 10 to 40%
TRACE - 0 to 10%

Trio Printers # 1127

CLARENCE WELTI ASSOC., INC.
P.O.BOX 397
GLASTONBURY, CONN. 06033

"BORING LOG"

PROJ. Nautilus; Groton, CT.
CLIENT FAY,SPOFFORD & THORNDIKE

BORING NO. WB-4
LINE & STA.
[redacted] (25' of water)
GR. ELEV. -24.6 (Mudline)

split spoon / U.P. sample / Rock

A	STRATUM DESCRIPTION	BLOWS PER 6"	B
1	black muck	push	
1			5.0
		push	
1			
1	OH		10.0
		push	
1			
1			14.0
			15.0
1	gr.organic silt, wood,shells	push	
1			
1			20.0
		push	
1			
1			
1	OH		25.0
2		push	
1			
2			
1			
2			30.0
3		push	
3			32.0
24	gr.fine-crs.sand, tr.silt		
32			
39			35.0
42		6-6-6	
43	SM		
47			38.0
48	gr.fine-med. sand,some silt		
50			40.0
45		3-4-5	
44			
46	SM		
49			
54			45.0

BORING NO.
LINE & STA.
OFFSET
GR. ELEV.

A	STRATUM DESCRIPTION	BLOWS PER	B
59			
57			
61			
54			
50			50.0
49			
55	gr.fine-med.sand, some silt	5-6-9	
61			
58			
57			55.0
55		6-7-8	
61			
58			
63			
59	SM		60.0
68		7-7-9	
73			
76			
79			
81			65.0
92		6-8-9	
90			
89			
90			
87			70.0
85		9-8-8	
88			
90			
92			
90			75.0
85			
84		7-7-10	
87			
90			
88			80.0
89			
99			
101			
102			
110			85.0
104		8-9-10	
112			
125			
130			
135			90.0

1. COL. A casing blows/FT. (300#,24" drop)
2. COL. B strata depth
3. HAMMER = 140#; FALL 30"
4. SAMPLER = 2" O.D. SPLIT SPOON
5. GWT = GROUND WATER

AND - 40 to 50%
SOME - 10 to 40%
TRACE - 0 to 10%

Trio Printers # 1127

CLARENCE WELTI ASSOC., INC.
P.O.BOX 397
GLASTONBURY, CONN. 06033

"BORING LOG"

PROJ. Nautilus; Groton, CT.
CLIENT FAY,SPOFFORD,THORNDIKE

BORING NO. WB-1
LINE & STA.
[redacted] (6' of water)
GR. ELEV. -5.0 (Mudline)

split spoon / U.P. sample / Rock

A	STRATUM DESCRIPTION	BLOWS PER 6"	B
141			
147	gr.fine sand, some silt		
150			
165			
171			95.0
182		10-18-22	
190			
201			
2-6			
192			100.0
200		11-14-22	
195			
198			
208			
225			105.0
198			
210			
215			
211			
225	SM		110.0
230		11-14-22	
228			
242			
240			
245			115.0
235			
250			
248			
261			
252			120.0
258		12-15-21	
272			
250			
247			
283			125.0
275			
268			
275			
280			
274			130.0
268		14-17-23	
242			
259			
205			
271			135.0

BORING NO.
LINE & STA.
OFFSET
GR. ELEV.

A	STRATUM DESCRIPTION	BLOWS PER	B
			136.0
	REFUSAL AT 136.0'		
	WATER ELEV. +1.0		
	DATE: 2/21/83		
	DRILLER: GIGGEY		
	OPEN END "A" ROD	REFUSAL	
	NX coring to bottom		

1. COL. A casing blows/FT. (300#,24" drop)
2. COL. B strata depth
3. HAMMER = 140#; FALL 30"
4. SAMPLER = 2" O.D. SPLIT SPOON
5. GWT = GROUND WATER

AND - 40 to 50%
SOME - 10 to 40%
TRACE - 0 to 10%

Trio Printers # 1127

CLARENCE WELTI ASSOC., INC.
P.O.BOX 397
GLASTONBURY, CONN. 06033

"BORING LOG"

PROJ. Nautilis; Groton, CT.
CLIENT FAY,SPOFFORD & THORNDIKE

BORING NO. WB-2
LINE & STA.
[redacted] (8.5' of water)
GR. ELEV. -7.9 (Mudline)

split spoon / U.P. sample / Rock

A	STRATUM DESCRIPTION	BLOWS PER 6"	B
169		10-12-16	
175			
182			
195			
201			95.0
	drilled from 95' with BX casing with drilling mud	10-14-15	
			100.
		11-15-16	
			105.0
		11-14-17	
	SM		110.0
			115.0
		12-13-15	
			120.0
			125.0
		10-12-17	
			130.0
		~~10-12-17~~ 60/0"	132.0
	REFUSAL AT 132.0		
			135.0

BORING NO.

LINE & STA.
OFFSET
GR. ELEV.

A	STRATUM DESCRIPTION	BLOWS PER	B
	DATE: 2/21-24/83		
	DRILLER: GIGGEY		
	WATER ELEV. +0.6		
	"H" casing to 45'		
	NX casinf to 90'		
	~~Bx casing to~~ refusal		
	REFUSAL ON OPEN END "A" ROD		

1. COL. A casing blows/FT. (300#,24" drop)
2. COL. B strata depth
3. HAMMER = 140#; FALL 30"
4. SAMPLER = 2" O.D. SPLIT SPOON
5. GWT = GROUND WATER

AND - 40 to 50%
SOME - 10 to 40%
TRACE - 0 to 10%

Trio Printers # 1127

CLARENCE WELTI ASSOC., INC.
P.O.BOX 397
GLASTONBURY, CONN. 06033

"BORING LOG"

PROJ. Nautilus; Groton, CT.
CLIENT FAY,SPOFFORD & THORNDIKE

BORING NO. WB-3
[redacted] (17' of water)
OFFSET
GR. ELEV. -17 (Mudline)

split spoon / U.P. sample / Rock

A	STRATUM DESCRIPTION	BLOWS PER 6"	B
135		5-6-9	
138	gr.fine-med.sand, some silt		
145			
158			
164			95.0
175		9-9-14	
160			
159			
158			
162			100
165		8-12-16	
170			
164			
165			
172	SM		105
159		9-12-14	
160			
165			
168			
172			110
165			
160			
178			
205			
195			115
			120
		9-12	121.0

REFUSAL AT 121.0'
~~100 blows on "OPEN END "A" ROD~~
no penetration
WATER ELEV. 0.0
DATE: 3/2-6/83
DRILLER: GIGGEY
NX casing to bottom

BORING NO.
LINE & STA.
OFFSET
GR. ELEV.

A	STRATUM DESCRIPTION	BLOWS PER	B

1. COL. A casing blows/FT. (300#,24" drop)
2. COL. B strata depth
3. HAMMER = 140#; FALL 30"
4. SAMPLER = 2" O.D. SPLIT SPOON
5. GWT = GROUND WATER

AND - 40 to 50%
SOME - 10 to 40%
TRACE - 0 to 10%

Trio Printers # 1127

CLARENCE WELTI ASSOC., INC.
P.O.BOX 397
GLASTONBURY, CONN. 06033

"BORING LOG"

PROJ. Nautilus; Groton, CT.
CLIENT FAY,SPOFFORD & THORNDIKE

BORING NO. WB-4
LINE & STA.
[redacted] (25' of water)
GR. ELEV. -24.6 (Mudline)

split spoon / U.P. sample / Rock

A	STRATUM DESCRIPTION	BLOWS PER	B
145			
142	gr.fine-med.sand, some silt	10-11-15	
165			
145			
160			95.0
150			
152			
158			
165			
160	SM		100.0
152		11-11-13	
160			
176			103.0
* 12	RUN #1 103'-108'		
16	rec.56"		105.0
15	granite,some		
17	quartz		
15			108.0
	WATER ELEVATION +0.4 BOTTOM OF BORING	108.0'	
	DATE: 3/6-16/83 DRILLER: GIGGEY		
	NX casing to bottom		
	* coring time (min/ft.)		

BORING NO.
LINE & STA.
OFFSET
GR. ELEV.

A	STRATUM DESCRIPTION	BLOWS PER	B

1. COL. A casing blows/FT. (300#,24" drop)
2. COL. B strata depth
3. HAMMER = 140#; FALL 30"
4. SAMPLER = 2" O.D. SPLIT SPOON
5. GWT = GROUND WATER

AND - 40 to 50%
SOME - 10 to 40%
TRACE - 0 to 10%

Trio Printers # 1127

RECEIVED, P M
SEP 23 '88
F.S.&T.,INC.

CHECK GRAPHIC SCALES BEFORE USING

CAMBRIDGE SEVEN ASSOCIATES, INC.
1050 MASSACHUSETTS AVENUE
CAMBRIDGE, MA 02138
ARCHITECTS AND EXHIBIT DESIGNERS

DSGN — DR — CHK HHS
SUPV NNW CH ENGR NNW
SUBMITTED BY [signature] DATE 7-25-83
FIRM MEMBER (TITLE) SR. V.P.
NORTHDIV HD
EDM HD
EFPE DIR
APPROVED DATE
OFFICER IN CHARGE DATE
APPROVED
NORTHDIV FOR COMMANDER NAVFAC

SATISFACTORY TO DATE

COMMONWEALTH OF MASSACHUSETTS NATHANIEL WENTWORTH Jr No 645 REGISTERED PROFESSIONAL ENGINEER

DEPARTMENT OF THE NAVY NAVAL FACILITIES ENGINEERING COMMAND
NORTHERN DIVISION
NAVAL BASE PHILADELPHIA, PA

NAVAL SUBMARINE BASE NEW LONDON GROTON, CONNECTICUT
NAUTILUS MEMORIAL
SUBMARINE FORCE LIBRARY AND MUSEUM

BORING LOGS - PART I

SIZE	CODE IDENT. NO.	NAVFAC DRAWING NO.	
F	80091	2071055	
		CONSTR. CONTR. NO. N62472-82-C-0035	
SCALE AS NOTED	SPEC. 04-82-0035	SHEET 95 OF 98	CB2

REVISIONS				
LTR	DESCRIPTION	PREP'D BY	DATE	APPROVED
	AS BUILT	WHF	4/23/87	

CLARENCE WELTI ASSOC., INC.
P.O.BOX 397
GLASTONBURY, CONN. 06033

"BORING LOG"

PROJ. Nautilus; Groton, CT.
CLIENT FAY,SPOFFORD & THORNDIKE

BORING NO. WB-5
LINE & STA. (8' of water)
GR. ELEV. - 8.5 (Mudline)

split spoon
U.P. sample
Rock

A	STRATUM DESCRIPTION	BLOWS PER 6"	B
	gr.organic silt, tr.shells	push	5.0
	Vane Shear Test @ 10'	push	10.0
	Vane Shear Test @ 15'	push	15.0
	Vane Shear Test @ 20'	push	20.0
	Vane Shear Test @ 30'	push	25.0
	WATER ELEVATION -0.5		30.0
	BOTTOM OF BORING 30.0'		
	DATE" 3/29/83 DRILLER: GIGGEY		

BORING NO.
LINE & STA.
OFFSET
GR. ELEV.

A	STRATUM DESCRIPTION	BLOWS PER	B

Trio Printers # 1127

1. COL. A casing blows/FT. (300#,24" drop)
2. COL. B strata depth
3. HAMMER = 140#; FALL 30"
4. SAMPLER = 2" O.D. SPLIT SPOON
5. GWT = GROUND WATER

AND - 40 to 50%
SOME - 10 to 40%
TRACE - 0 to 10%

CLARENCE WELTI ASSOC., INC.
P.O.BOX 397
GLASTONBURY, CONN. 06033

"BORING LOG"

PROJ. Nautilus; Groton, CT.
CLIENT FAY,SPOFFORD & THORNDIKE

BORING NO. WB-6
LINE & STA. (27' of water)
GR. ELEV. -27.5 (Mudline)

split spoon
U.P. sample
Rock

A	STRATUM DESCRIPTION	BLOWS PER 6"	B
1	black muck	push	5.0
1	OH	push	10.0
1			12.0
1	gr.organic silt		15.0
1		push	20.0
1	OH	push	25.0
1		push	30.0
19	gr/br.fine-crs. sand,tr.fine gravel	7-7-9	35.0
42	SW	7-9-11	38.0
46			40.0
49	gr.fine-med.sand, some silt	5-6-7	45.0
52	SM		
50			
54			
59			
62			

A	STRATUM DESCRIPTION	BLOWS PER	B
64	gr.fine-med. sand,some silt	6-7-8	50.0
59			
53		7-8-8	55.0
65			
67			
65			
63			
68	SM	8-8-9	60.0
71			
69			
64			
69			
74		8-9-11	65.0
78			
84			
89			
101			
108		8-9-12	70.0
105			
105			
110			
115			
120		8-10-12	75.0
123			
131			
124			
132			
125		7-9-12	80.0
142			
140			
138			
143			
150		8-11-12	85.0
149			
135			
138			
132			
142		9-12-12	90.0
139			
145			
153			
161			

Trio Printers # 1127

1. COL. A casing blows/FT. (300#,24" drop)
2. COL. B strata depth
3. HAMMER = 140#; FALL 30"
4. SAMPLER = 2" O.D. SPLIT SPOON
5. GWT = GROUND WATER

AND - 40 to 50%
SOME - 10 to 40%
TRACE - 0 to 10%

CLARENCE WELTI ASSOC., INC.
P.O.BOX 397
GLASTONBURY, CONN. 06033

"BORING LOG"

PROJ. Nautilus; Groton, CT.
CLIENT FAY,SPOFFORD & THORNDIKE

BORING NO. WB-7
LINE & STA. (25' of water)
GR. ELEV. -24.2 (Mudline)

split spoon
U.P. sample
Rock

A	STRATUM DESCRIPTION	BLOWS PER 6"	B
1	black muck	push	5.0
1	OH		
	gr.organic silt	push	10.0
1	U.P. #1 10'-12' rec.24"		
1	OH		15.0
		push	20.0
1	U.P.#2 20'-22' rec.12"		
1		push	25.0
2	U.P.#3 30'-32' rec.18"		30.0
5			
5			35.0
3		push	
4			40.0
6			
5			
6			
6			
7		push	45.0
8			
10			
12			
14			

BORING NO.
LINE & STA.
OFFSET
GR. ELEV.

A	STRATUM DESCRIPTION	BLOWS PER	B
14	gr.organic silt	push	50.0
18	OH		
10		push	52.0
12	gr.fine-crs. sand,some fine-med.gravel		
23			55.0
39		14-22-32	
49	SW		58.0
49			
54	gr.fine-med. sand,some silt		60.0
54		4-5-6	
61	SM		65.0
53			
48			
50			
48			
50			
47			70.0
49		5-6-6	
53			
62			
64			
62			75.0
68			
72			
74			
79			
81			80.0
74			
74			
72			
78			
70			85.0
77			
83			
84			
82			
80			90.0
83			
85			
82			
84			
82			

Trio Printers # 1127

1. COL. A casing blows/FT. (300#,24" drop)
2. COL. B strata depth
3. HAMMER = 140#; FALL 30"
4. SAMPLER = 2" O.D. SPLIT SPOON
5. GWT = GROUND WATER

AND - 40 to 50%
SOME - 10 to 40%
TRACE - 0 to 10%

CLARENCE WELTI ASSOC., INC.
P.O.BOX 397
GLASTONBURY, CONN. 06033

"BORING LOG"

PROJ. Nautilus; Groton, CT.
CLIENT FAY,SPOFFORD & THORNDIKE

BORING NO. WB-6
LINE & STA. (27' of water)
GR. ELEV. -27.5 (Mudline)

split spoon
U.P. sample
Rock

A	STRATUM DESCRIPTION	BLOWS PER 6"	B
165	gr.fine-med. sand,some silt	8-12-14	95.0
158			
165		8-10-14	
152	SM		100.0
148			
149		9-11-15	
160			105.0
155			
164			
171			110.0
149			
153			
161			
158			
148			
165			
160			
163			
158			
165			
175		10-12-25	112.0
162			
	REFUSAL AT 112.0 100 blows no penetration on ~~OPEN END "A" ROD~~		
	DATE: 2/25-3/1/83 DRILLER: GIGGEY		
	NX casing to bottom WATER ELEV.-0.5		

BORING NO.
LINE & STA.
OFFSET
GR. ELEV.

A	STRATUM DESCRIPTION	BLOWS PER	B

Trio Printers # 1127

1. COL. A casing blows/FT. (300#,24" drop)
2. COL. B strata depth
3. HAMMER = 140#; FALL 30"
4. SAMPLER = 2" O.D. SPLIT SPOON
5. GWT = GROUND WATER

AND - 40 to 50%
SOME - 10 to 40%
TRACE - 0 to 10%

CLARENCE WELTI ASSOC., INC.
P.O.BOX 397
GLASTONBURY, CONN. 06033

"BORING LOG"

PROJ. Nautilus; Groton, CT.
CLIENT FAY,SPOFFORD & THORNDIKE

BORING NO. WB-7
LINE & STA. (25' of water)
GR. ELEV. -24.2 (Mudline)

split spoon
U.P. sample
Rock

A	STRATUM DESCRIPTION	BLOWS PER 6"	B
35	gr.fine-med. sand,some silt	7-9-10	95.0
34			
39			
42			
49			
44			100.0
46			
49			
61			
64			
62		10-11-11	105.0
60			
60			
54			
56	SM		110.0
56		9-12-11	
62			
65			
67			
69			
61		10-10-12	115.0
72			
70			
73			
74			
75		11-13-12	117.0
119			
* 21	cored granite gneiss		120.0
20	RUN #1 117'-122'		
19	rec.51"		
22			122.0
25			
	BOTTOM OF BORING	122.0'	
	WATER AT ELEV.+0.8		
	"H" casing to 52' NX casing to 90' BX casing to bottom		
	DATE: 3/17/83		
	DRILLER: GIGGEY		
	*coring time (min/ft.)		

BORING NO.
LINE & STA.
OFFSET
GR. ELEV.

A	STRATUM DESCRIPTION	BLOWS PER	B

Trio Printers # 1127

1. COL. A casing blows/FT. (300#,24" drop)
2. COL. B strata depth
3. HAMMER = 140#; FALL 30"
4. SAMPLER = 2" O.D. SPLIT SPOON
5. GWT = GROUND WATER

AND - 40 to 50%
SOME - 10 to 40%
TRACE - 0 to 10%

RECEIVED, P M
SEP 23 '88
F.S.&T.,INC.

CHECK GRAPHIC SCALES BEFORE USING

CAMBRIDGE SEVEN ASSOCIATES, INC.
1050 MASSACHUSETTS AVENUE
CAMBRIDGE, MA 02138
ARCHITECTS AND EXHIBIT DESIGNERS

DEPARTMENT OF THE NAVY NAVAL FACILITIES ENGINEERING COMMAND
NORTHERN DIVISION
NAVAL BASE PHILADELPHIA, PA

DSGN — DR — CHK H.H.S
SUPV. A.J.W. CH ENGR A.J.W.
SUBMITTED BY DATE
FIRM MEMBER (TITLE) 7-25-83
NORTHDIV HD
CM HD
FE DR
APPROVED DATE
OFFICER IN CHARGE DATE
APPROVED
NORTHDIV FOR COMMANDER NAVFAC
SATISFACTORY T/O DATE

NAVAL SUBMARINE BASE NEW LONDON GROTON, CONNECTICUT
NAUTILUS MEMORIAL
SUBMARINE FORCE LIBRARY AND MUSEUM

BORING LOGS - PART 2

SIZE	CODE IDENT. NO.	NAVFAC DRAWING NO.
F	80091	2071056
		CONSTR. CONTR. NO. N62472-82-C-0035
SCALE AS NOTED	SPEC. 04-82-0035	SHEET 96 OF 98 CB3

REVISIONS				
LTR	DESCRIPTION	PREP'D BY	DATE	APPROVED
	AS BUILT	WHF	10/23/87	

CLARENCE WELTI ASSOC., INC.
P.O.BOX 397
GLASTONBURY, CONN. 06033

"BORING LOG"

PROJ. Nautilus; Groton, CT.
CLIENT FAY,SPOFFORD & THORNDIKE

BORING NO. LB-1
LINE & STA.
OFFSET
GR. ELEV. +6±

split spoon
U.P. sample
Rock

A	STRATUM DESCRIPTION	BLOWS PER 6"	B
	br/blk.fine-crs. sand,some cobbles & boulders & silt, fill		
		27-51	9.0
	gr/blk.organic silt	1-0-1-0	15.0
	OH		20.0
		1-0-1-0	25.0
			30.0
		1-0-1-0	34.0
	gr.fine-crs.sand, some fine-crs. gravel,tr.cobbles SW	9-11-14-17	40.0
	gr.fine sand,some silt & br.fine-med.sand in layers,tr.cobbles		45.0

BORING NO.
LINE & STA.
OFFSET
GR. ELEV.

A	STRATUM DESCRIPTION	BLOWS PER	B
		17-20-26	50.0
		13-17-24	55.0
	gr.fine sand,some silt & br.fine-med.sand in layers, tr. cobbles		60.0
	SW	12-16-19-29	65.0
			70.0
		13-22-27	75.0
			80.0
		19-23-29	85.0
			90.0

Trio Printers # 1127

1. COL. A casing blows/FT. (300#,24" drop)
2. COL. B errata depth
3. HAMMER = 140#; FALL 30"
4. SAMPLER = 2" O.D. SPLIT SPOON
5. GWT = GROUND WATER

AND - 40 to 50%
SOME - 10 to 40%
TRACE - 0 to 10%

CLARENCE WELTI ASSOC., INC.
P.O.BOX 397
GLASTONBURY, CONN. 06033

"BORING LOG"

PROJ. Nautilus; Groton, CT.
CLIENT FAY,SPOFFORD & THORNDIKE

BORING NO. LB-2
LINE & STA.
OFFSET
GR. ELEV. +7±

split spoon
U.P. sample
Rock

A	STRATUM DESCRIPTION	BLOWS PER 6"	B
	fill,concrete, sand,wood,metal & blasted rock, & gravel		5.0
		1-0-0	10.0
		60/2"	15.0
		60/5"	17.0
	gr.organic silt with shells		20.0
	U.P. #1 20'-22' rec.15" OH	1-1-2	25.0
		1-1-1	30.0
	U.P.#2 30'-32' rec.14"	1-1-1	35.0
	**	Z-9-11	36.0 39.0
	gr.fine sand		40.0
	SM	11-12-12	45.0

BORING NO.
LINE & STA.
OFFSET
GR. ELEV.

A	STRATUM DESCRIPTION	BLOWS PER	B
	gr.fine sand	12-13-13	50.0
	SM	14-13-13	55.0
		12-13-14	60.0
	gr.fine-crs.sand, little fine gravel SW	7-9-11	64.0 65.0
		8-8-10	70.0
	gr/br.fine sand	6-9-11	75.0
	SM	8-9-10	80.0
		14-14-14	85.0
		12-13-14	90.0

Trio Printers # 1127

1. COL. A casing blows/FT. (300#,24" drop)
2. COL. B errata depth
3. HAMMER = 140#; FALL 30"
4. SAMPLER = 2" O.D. SPLIT SPOON
5. GWT = GROUND WATER

AND - 40 to 50%
SOME - 10 to 40%
TRACE - 0 to 10%

CLARENCE WELTI ASSOC., INC.
P.O.BOX 397
GLASTONBURY, CONN. 06033

"BORING LOG"

PROJ. Nautilus,: Groton, CT.
CLIENT FAY,SPOFFORD & THORNDIKE

BORING NO. LB-3
LINE & STA.
OFFSET
GR. ELEV. +11±

split spoon
U.P. sample
Rock

A	STRATUM DESCRIPTION	BLOWS PER 6"	B
	fill,blk.cinders, gravel,wood, bricks,metal, wire		5.0
		3-5-7	10.0
		13-15-15	15.0
		11-11-11	18.0
	gr.organic silt & fine sand with shells OH	5-2-5	20.0 22.0
	gr.fine-crs. gravel & sand SW		24.0
	AUGER REFUSAL AT WATER AT 10' @ 0 hrs. DATE: 3/7/83 DRILLER: BROMLEY Hollow Stem Auger Boring	24.0'	

BORING NO.
LINE & STA.
OFFSET
GR. ELEV.

A	STRATUM DESCRIPTION	BLOWS PER	B

Trio Printers # 1127

1. COL. A casing blows/FT. (300#,24" drop)
2. COL. B errata depth
3. HAMMER = 140#; FALL 30"
4. SAMPLER = 2" O.D. SPLIT SPOON
5. GWT = GROUND WATER

AND - 40 to 50%
SOME - 10 to 40%
TRACE - 0 to 10%

CLARENCE WELTI ASSOC., INC.
P.O.BOX 397
GLASTONBURY, CONN. 06033

"BORING LOG"

PROJ. Nautilus, Groton, CT.
CLIENT FAY,SPOFFORD & THORNDIKE

BORING NO. LB-5
LINE & STA.
OFFSET
GR. ELEV. + 8±

split spoon
U.P. sample
Rock

A	STRATUM DESCRIPTION	BLOWS PER 6"	B
	fill,gravel, concrete,wood, metal		5.0
		2-1-5	10.0
		1-5-2	15.0
	gr.organic silt with shells OH	1-1-1	20.0
		1-1-1	25.0
		1-1-2	30.0
	**		
	gr.fine sand SM	6-8-11	35.0
		7-9-13	40.0
		6-9-10	45.0

BORING NO.
LINE & STA.
OFFSET
GR. ELEV.

A	STRATUM DESCRIPTION	BLOWS PER	B
	gr.fine sand, little fine-crs. gravel in layers SW	13-15-19 60/4"	50.3
	**gr.fine-crs.sand, some fine gravel (SW) REFUSAL AT 50.3 WATER AT 2.5' @ 0 hrs. DATE: 3/9/83 DRILLER: BROMLEY Hollow Stem Auger Boring		

Trio Printers # 1127

1. COL. A casing blows/FT. (300#,24" drop)
2. COL. B errata depth
3. HAMMER = 140#; FALL 30"
4. SAMPLER = 2" O.D. SPLIT SPOON
5. GWT = GROUND WATER

AND - 40 to 50%
SOME - 10 to 40%
TRACE - 0 to 10%

CLARENCE WELTI ASSOC., INC.
P.O.BOX 397
GLASTONBURY, CONN. 06033

"BORING LOG"

PROJ. Nautilus; Groton, CT.
CLIENT FAY,SPOFFORD & THORNDIKE

BORING NO. LB-1
LINE & STA.
OFFSET
GR. ELEV. +6±

split spoon
U.P. sample
Rock

A	STRATUM DESCRIPTION	BLOWS PER 6"	B
	gr.fine sand,some silt & br.fine-med sand in layers, tr.cobbles SW	17-28-34	99.0
	ROLLER BIT REFUSAL AT 99.0' WATER AT 3.5' @ 0 hrs. DATE: 3/31-4/1/83 DRILLER: MOODIE		

BORING NO.
LINE & STA.
OFFSET
GR. ELEV.

A	STRATUM DESCRIPTION	BLOWS PER	B

Trio Printers # 1127

1. COL. A casing blows/FT. (300#,24" drop)
2. COL. B errata depth
3. HAMMER = 140#; FALL 30"
4. SAMPLER = 2" O.D. SPLIT SPOON
5. GWT = GROUND WATER

AND - 40 to 50%
SOME - 10 to 40%
TRACE - 0 to 10%

CLARENCE WELTI ASSOC., INC.
P.O.BOX 397
GLASTONBURY, CONN. 06033

"BORING LOG"

PROJ. Nautilus; Groton, CT.
CLIENT FAY,SPOFFORD & THORNDIKE

BORING NO. LB-2
LINE & STA.
OFFSET
GR. ELEV. +7±

split spoon
U.P. sample
Rock

A	STRATUM DESCRIPTION	BLOWS PER 6"	B
	gr/br.fine sand	10-11-15	95.0
	SM	9-10-10	100.0
		13-13-14	105
		19-100	106.0
	**36'-39' gr.fine-crs.gravel, some fine-crs.sand,tr.cobbles REFUSAL AT 106.0' WATER AT 12' @ 0 hrs. DATE: 3/14/83 DRILLER: BROMLEY Note: Used 4" casing to 40' then reduced to 3"		

BORING NO.
LINE & STA.
OFFSET
GR. ELEV.

A	STRATUM DESCRIPTION	BLOWS PER	B

Trio Printers # 1127

1. COL. A casing blows/FT. (300#,24" drop)
2. COL. B errata depth
3. HAMMER = 140#; FALL 30"
4. SAMPLER = 2" O.D. SPLIT SPOON
5. GWT = GROUND WATER

AND - 40 to 50%
SOME - 10 to 40%
TRACE - 0 to 10%

CLARENCE WELTI ASSOC., INC.
P.O.BOX 397
GLASTONBURY, CONN. 06033

"BORING LOG"

PROJ. Nautilus; Groton, CT.
CLIENT FAY,SPOFFORD & THORNDIKE

BORING NO. LB-4
LINE & STA.
OFFSET
GR. ELEV. + 10±

split spoon
U.P. sample
Rock

A	STRATUM DESCRIPTION	BLOWS PER 6"	B
	br.fine-crs.sand & gravel,fill		3.5
	fill,blk.cinders, wire,wood,glass bricks,gravel	12-5-1	5.0
		1-2-5	10.0
		1-1-3	15.0 18.0
			20.0
	gr.organic silt with shells U.P.#1 22'-24' rec.0"	1-1-1	25.0
	U.P.#2 25'-27' rec.24"	1-1-1	30.0
	U.P.#3 30'-32' rec.24" OH	1-1-2	33.5
	gr.fine sand		35.0
	SM	8-8-11	40.0
		7-9-12	45.0

BORING NO.
LINE & STA.
OFFSET
GR. ELEV.

A	STRATUM DESCRIPTION	BLOWS PER	B
	gr.fine sand	8-9-11	50.0
		6-9-10	51.5
	BOTTOM OF BORING WATER AT 10' @ 0 hrs. DATE: 3/7/83 DRILLER:BROMLEY Hollow Stem Auger Boring	51.5'	

Trio Printers # 1127

1. COL. A casing blows/FT. (300#,24" drop)
2. COL. B errata depth
3. HAMMER = 140#; FALL 30"
4. SAMPLER = 2" O.D. SPLIT SPOON
5. GWT = GROUND WATER

AND - 40 to 50%
SOME - 10 to 40%
TRACE - 0 to 10%

CLARENCE WELTI ASSOC., INC.
P.O.BOX 397
GLASTONBURY, CONN. 06033

"BORING LOG"

PROJ. Nautilus, Groton, CT.
CLIENT FAY,SPOFFORD & THORNDIKE

BORING NO. LB-6
LINE & STA.
OFFSET
GR. ELEV. + 6±

split spoon
U.P. sample
Rock

A	STRATUM DESCRIPTION	BLOWS PER 6"	B
	fill,blasted rock, concrete,wood, gravel		5.0
		2-3-4	10.0
		14-81	13.0
	gr.organic silt with shells OH	1-1-2	15.0 20.0
		1-1-1	25.0
		1-1-1	28.0
	** SW		30.0
	gr.fine sand SM	6-7-8	35.0
		5-9-11	40.0
			41.0
	br.fine-med.sand, tr.crs.gravel SM	10-13-17	45.0

BORING NO.
LINE & STA.
OFFSET
GR. ELEV.

A	STRATUM DESCRIPTION	BLOWS PER	B
	br.fine-med.sand, tr.crs.gravel	20-22-31	48.0
	**gr.fine-crs. sand,little fine-med.gravel AUGER REFUSAL , REFUSAL AT 48.0 WATER AT 1.3' @ 0 hrs. DATE: 3/9/83 DRILLER: BROMLEY Hollow Stem Auger Boring		

Trio Printers # 1127

1. COL. A casing blows/FT. (300#,24" drop)
2. COL. B errata depth
3. HAMMER = 140#; FALL 30"
4. SAMPLER = 2" O.D. SPLIT SPOON
5. GWT = GROUND WATER

AND - 40 to 50%
SOME - 10 to 40%
TRACE - 0 to 10%

CHECK GRAPHIC SCALES BEFORE USING

RECEIVED, P M
SEP 23 '88
F.S.&I.,INC.

CAMBRIDGE SEVEN ASSOCIATES, INC.
1050 MASSACHUSETTS AVENUE
CAMBRIDGE, MA 02138
ARCHITECTS AND EXHIBIT DESIGNERS

DEPARTMENT OF THE NAVY NAVAL FACILITIES ENGINEERING COMMAND
NORTHERN DIVISION
NAVAL BASE PHILADELPHIA, PA

DSGN — DR — CHK WHS
SUPV NWW CH ENGR NWW
SUBMITTED BY [signature] DATE 7-20-83
FIRM MEMBER (TITLE) [signature]
NORTHDIV HD [signature]
DIV HD [signature]
FPE DIR [signature]
APPROVED DATE
OFFICER IN CHARGE DATE
APPROVED
NORTHDIV FOR COMMANDER NAVFAC

SATISFACTORY TO DATE

NAVAL BASE NEW LONDON GROTON, CONNECTICUT
NAUTILUS MEMORIAL
SUBMARINE FORCE LIBRARY AND MUSEUM

BORING LOGS - PART 3

SIZE	CODE IDENT. NO.	NAVFAC DRAWING NO.
F	80091	2071057

CONSTR. CONTR. NO. N62472-82-C-0035

SCALE AS NOTED | SPEC. 04-82-0035 | SHEET 97 OF 98 | CB4

General Borings, Inc. — Boring Log (Hole No. 1-BR)

Hayden, Harding & ...
CLIENT: Buchanan, Inc.
General Borings, Inc. P.O. BOX 7135 PROSPECT, CONN. 06712
SHEET 1 OF 1 HOLE NO. 1-BR

CONTRACTOR
PROJECT NAME: Sub Base
LOCATION: Coss Cove
Groton, Conn.
DRILLER: J-B RRT
INSPECTOR: J. W. Wormack
GROUND WATER OBSERVATIONS: AT 6'8" FT AFTER 0 HOURS; AT ___ FT AFTER ___ HOURS

	CASING	SAMPLER	CORE BAR
TYPE	FJ	SS	
SIZE I.D.	2 3/8	1 3/8	
HAMMER WT		140	BIT
HAMMER FALL		30"	

Date Start 11/5 Date Fin. 11/6/69
SURFACE ELEV. (7 ±)
GROUND WATER ELEV. ___

SAMPLE NO.	TYPE	PEN	REC	DEPTH @ BOT	BLOWS PER 6" ON SAMPLER 0-6 / 6-12 / 12-18	DENSITY OR CONSIST. MOIST	STRATA CHANGE DEPTH ELEV	FIELD IDENTIFICATION OF SOIL, REMARKS
1	ss	18"	9"	1'6"	7 9 9	dry loose	2"	Topsoil. 1) Brown med-fine sand, trace med-fine gravel, trace cinders and blacktop.
2	"	"	6"	6'6"	2 1 2	dry very loose		2) Brown med-fine sand, trace med-fine gravel, trace wood, trace silt.
3	"	"	0"	11'6"	12 19 23	"		3) No recovery - pushed cobble down.
							13'8"	Cored boulder 13'8"-15'4".
4	"	"	4"	16'10"	2 1 2		15'4"	4) Gray peat, trace vegetation, trace silt, trace shell
5	"	"	5"	21'6"	1 1 2	wet very soft	22'	5) Same as #4 sample.
6	"	"	0"	23'8"	75/0"		23'8"	End of Boring 23'8".

TYPE OF SAMPLES: D = DRY, W = WASHED, C = CORED, A = AUGER, UP = UNDISTURBED PISTON, UB = UNDISTURBED BALL CHECK, VT = VANE TEST
PROPORTIONS USED: TRACE = 0-10%, LITTLE = 10-20%, SOME = 20-35%, AND = 35-50%
TOTAL FOOTAGE 23'8"; EARTH BORING 22' (1'8" struck out) FT.; ROCK CORING ___ FT.

General Borings, Inc. — Boring Log (Sheet 2)

Hayden, Hardi...
CLIENT: Buchanan, Inc.
DRILLER: J-B RRT — LOCATION: Cos...
INSPECTOR: J.W. Wormack — Grot...
GROUND WATER OBSERVATIONS: AT 11' FT AFTER 0 HOURS

SAMPLE NO.	TYPE	PEN	REC	DEPTH @ BOT	BLOWS PER 6" ON SAMPLER	DENSITY OR CONSIST.	STRATA CHANGE DEPTH	FIELD IDENTIFICATION OF SOIL, REMARKS
1	ss	18"	10"	1'6"	2 3 6	dry loose	3'	1) ... ce m... silt, trac...
2	"	"	0"	6'6"	9 10 13	"		2) No recovery - pu... cobble down.
							7" / 8'10"	Cored 22" boulder, recovered 20".
3	"	"	0"	10'6"	55/6"		10'	3) No recovery-pushed cobble down. Cored boulders 10'-15'.
4	"	"	0"	15'0"			15'	No sample at 15' - still drilling boulder.
5	"	24"	18"	22'	2 3 2 2	wet very soft		5) Brown peat, trace vegetation, trace silt, trace wood.
6	"	24"	18"	27'	2 3 3 9	wet loose	26'6"	6) Gray med-fine sand, trace med-cor gravel, trace silt. Note: Pulled out casing to change shoe bit at 10'-15'.
7	"	24"	16"	32'	25 25 35 40	wet med		7) Gray med-fine sand, trace med-fine gravel, trace silt.
8	"	24"	17"	37'	21 45 50 50	wet med	34'	8) Gray very fine sand, trace silt.
9	"	"	6"	39'	71/0"	BOB	39'	9) Refusal on split spoon at 39'.

TOTAL FOOTAGE 39'; EARTH BORING 37'2" FT.; ROCK CORING 1'10" FT.

General Borings, Inc. — Boring Log (partial sheet)

SAMPLE NO.	TYPE	PEN	REC	DEPTH @ BOT	BLOWS PER 6" ON SAMPLER	DENSITY OR CONSIST.	STRATA CHANGE DEPTH	FIELD IDENTIFICATION OF SOIL, REMARKS
4	"	24"	0"	18'	1 WOH 1 3			spoon - overdrove 2'. *3) Overdrove S.S. 2'. Gray silt, trace med-fine sand.
5	"	24"	5"	22'	1 1 1 2	wet very soft		5) Gray-black peat, trace vegetation, trace wood.
6	"	24"	18"	27'	1 WOH 1 2	wet very soft		6) Same as #5 sample.
7	"	24"	13"	32'	[illegible] 0 H 9	wet loose	30' / 31'6"	7) Gray med-fine sand, trace med-fine gravel, trace silt.
8	"	18"	18"	36'6"	9 11 13	wet		8) Gray med-fine sand.
9	"	"	9"	41'6"	15 40 60	wet very dense	48'	9) Yellow-brown med-fine sand, trace med-fine gravel, trace silt.

TOTAL FOOTAGE ___; EARTH BORING ___ FT.; ROCK CORING ___ FT.

General Borings, Inc. — Boring Log (partial sheet, blank grid)

TOTAL FOOTAGE 42'; EARTH BORING 5_ FT.; ROCK CORING ___ FT.

PRELIMINARY

CLARENCE WELTI ASSOC., INC. "BORING LOG"

CLARENCE WELTI ASSOC., INC. P.O. BOX 397 GLASTONBURY, CONN. 06033
PROJ. NAUTILUS MEMORIAL; Groton
CLIENT FAY, SPOFFORD & THORNDIKE

BORING NO. 82 - 1
[redacted] 0 = top of water
OFFSET ___
GR. ELEV. mudline -18

A	STRATUM DESCRIPTION	BLOWS PER ___	B
5.0	gr.organic silt, some peat	push	
	gr.organic silt, tr.shells	push	
	OH	push	
		push	
24.0	gr.fine-crs.sand	8-9-11-14	
	SW		
32.0		8-9-12-19	
37.0	br.fine-crs.sand, little fine-crs. gravel, tr.silt SW	25-6-8-9	
	BOTTOM OF BORING 37.0'		
	18' WATER @ MLW		
	DATE: 4/9/82 ; DRILLER GIGGEY		

BORING NO. 82-2
[redacted] 0 = top of water
OFFSET ___
GR. ELEV. mudline -22

A	STRATUM DESCRIPTION	BLOWS PER ___	B
	black muck		
	OH		
13.0		push	
	gr.organic silt	push	
		push	
	OH	push	
30.0		push	
	BOTTOM OF BORING 30.0'		
	22' WATER @ MLW		
	DATE: 4/13/82 DRILLER: GIGGEY		

1. COL. A strata depth
2. COL. B ___
3. HAMMER = 140#; FALL 30"
4. SAMPLER = ___ O.D. SPLIT SPOON
5. GWT = GROUND WATER

AND - 40 to 50%
SOME - 10 to 40%
TRACE - 0 to 10%

Trio Printers # 1127

PRELIMINARY

CLARENCE WELTI ASSOC., INC. "BORING LOG"

CLARENCE WELTI ASSOC., INC. P.O. BOX 397 GLASTONBURY, CONN. 06033
PROJ. NAUTILUS MEMORIAL; Groton
CLIENT FAY, SPOFFORD & THORNDIKE

BORING NO. 82- 3
[redacted] 0 = top of water
OFFSET ___
GR. ELEV. mudline -10

A	STRATUM DESCRIPTION	BLOWS PER ___	B
	gr.organic silt		
		push	
	OH		
		push	
		push	
42.0		push	
	BOTTOM OF BORING 42.0'		
	10' WATER @ MLW		

BORING NO. ___
LINE & STA. ___
OFFSET ___
GR. ELEV. ___

A	STRATUM DESCRIPTION	BLOWS PER ___	B

1. COL. A ___
2. COL. B ___
3. HAMMER = 140#; FALL 30"
4. SAMPLER = ___ O.D. SPLIT SPOON
5. GWT = GROUND WATER

DATE: 4/13-14/82
DRILLER: GIGGEY

AND - 40 to 50%
SOME - 10 to 40%
TRACE - 0 to 10%

Trio Printers # 1127

PRELIMINARY

CLARENCE WELTI ASSOC., INC. "BORING LOG"

CLARENCE WELTI ASSOC., INC. P.O. BOX 397 GLASTONBURY, CONN. 06033
PROJ. NAUTILUS MEMORIAL; Groton
CLIENT FAY, SPOFFORD, THORNDIKE

BORING NO. 82-4
LINE & STA. ___
OFFSET ___
GR. ELEV. 9.9

A	STRATUM DESCRIPTION	BLOWS PER 6"	B
0.2	asphalt		
1.5	**		
6.0	blk/br.fine-med.sand some fine-med.gravel little metal, misc. fill		
10.5	fine-crs.gravel, occasional cobbles, little blk.fine-med. sand, little metal, fill		
	blk.fine-med.sand, little fine gravel & metal, fill	3-2-1	
		4-3-4	
21.5		1-1-1	
	gr.organic silt w/shells		
29.5	OH		
33.0	gr.fine-med.sand SM	11-12-14	
	**br.fine-med.sand, little fine-med.gravel, fill		
	AUGER REFUSAL AT 33.0		
	WATER AT 8' @ 0 hrs.		
	DATE: 4/15/82 DRILLER: URSIN		

BORING NO. 82-5
LINE & STA. ___
OFFSET ___
GR. ELEV. 8.4

A	STRATUM DESCRIPTION	BLOWS PER 6"	B
0.2	asphalt		
2.0	**		
5.0	blk/br.fine-med.sand little fine-med.gravel & metal, fill		
	cobbles, boulders, fine-crs.gravel, little blk.fine-med. sand & metal, fill		
13.0			
	boulders, cobbles, fine-med.gravel, little br.fine-med. sand SW	14-5-3	
21.0			
	gr.organic silt		
28.0	OH	1-1-1	
30.0	gr.fine-med.sand SM	12-14-14	
	**fine-crs.gravel, little br.fine-med. sand, fill		
	BOTTOM OF BORING 30.0		
	WATER AT 8' @ 0 hrs.		
	DATE: 4/15/82 DRILLER: URSIN		

1. COL. A strata depth
2. COL. B ___
3. HAMMER = 140#; FALL 30"
4. SAMPLER = ___ O.D. SPLIT SPOON
5. GWT = GROUND WATER

AND - 40 to 50%
SOME - 10 to 40%
TRACE - 0 to 10%

Trio Printers # 1127

CLARENCE WELTI ASSOC., INC. "BORING LOG"

CLARENCE WELTI ASSOC., INC. P.O. BOX 397 GLASTONBURY, CONN. 06033
PROJ. NAUTILUS MEMORIAL; Groton
CLIENT FAY, SPOFFORD & THORNDIKE

BORING NO. 82-6
LINE & STA. ___
OFFSET ___
GR. ELEV. 6.8

A	STRATUM DESCRIPTION	BLOWS PER 6"	B
1.5	br.fine sand, fill		
	blk.fine-crs.sand, little fine gravel, tr.metal, fill		
		14-8-3	
16.0			
	gr.organic silt w/shells		
		1-1-1	
	OH		
		1-1-1	
36.5		1-1-1	
38.0	** SW	18-28-35	
	**gr.med-crs.sand, little fine gravel		
	BOTTOM OF BORING 38.0		
	WATER AT 8' @ 0 hrs.		

BORING NO. P-1-82
LINE & STA. ___
OFFSET ___
GR. ELEV. 1.0±

A	STRATUM DESCRIPTION	BLOWS PER ___	B
	PROBE #1 El.1.0±		
	24' Organic Silt		
	No Refusal		
	DATE: 5/16/82 DRILLER: URSIN		

1. COL. A ___
2. COL. B ___
3. HAMMER = 140#; FALL 30"
4. SAMPLER = ___ O.D. SPLIT SPOON
5. GWT = GROUND WATER

AND - 40 to 50%
SOME - 10 to 40%
TRACE - 0 to 10%

Trio Printers # 1127

RECEIVED, P M
SEP 23 '88
F S.&T., INC.

CHECK GRAPHIC SCALES BEFORE USING

CAMBRIDGE SEVEN ASSOCIATES, INC.
1050 MASSACHUSETTS AVENUE
CAMBRIDGE, MA 02138
ARCHITECTS AND EXHIBIT DESIGNERS

DEPARTMENT OF THE NAVY NAVAL FACILITIES ENGINEERING COMMAND
NORTHERN DIVISION
NAVAL BASE PHILADELPHIA, PA

NAVAL SUBMARINE BASE NEW LONDON GROTON, CONNECTICUT
NAUTILUS MEMORIAL
SUBMARINE FORCE LIBRARY AND MUSEUM

BORING LOGS - PART 4

DSGN — DR — CHK HHS
SUPV NNW CH ENGR NNW
SUBMITTED BY [signature] DATE
FIRM MEMBER (TITLE)
NORTHDIV DM HD
FPE BR
APPROVED DATE:
OFFICER IN CHARGE DATE
APPROVED [signature] P.E. 8/4/83
NORTHDIV FOR COMMANDER NAVFAC

COMMONWEALTH OF MASSACHUSETTS — NATHANIEL N. WENTWORTH, JR. No. 6457 — REGISTERED PROFESSIONAL ENGINEER

SATISFACTORY TO ___ DATE ___

SIZE	CODE IDENT. NO.	NAVFAC DRAWING NO.
F	80091	2071749

CONSTR. CONTR. NO. N62472-82-C-0036
SCALE AS NOTED SPEC. 04-82-0036 SHEET 98 OF 98 C-86

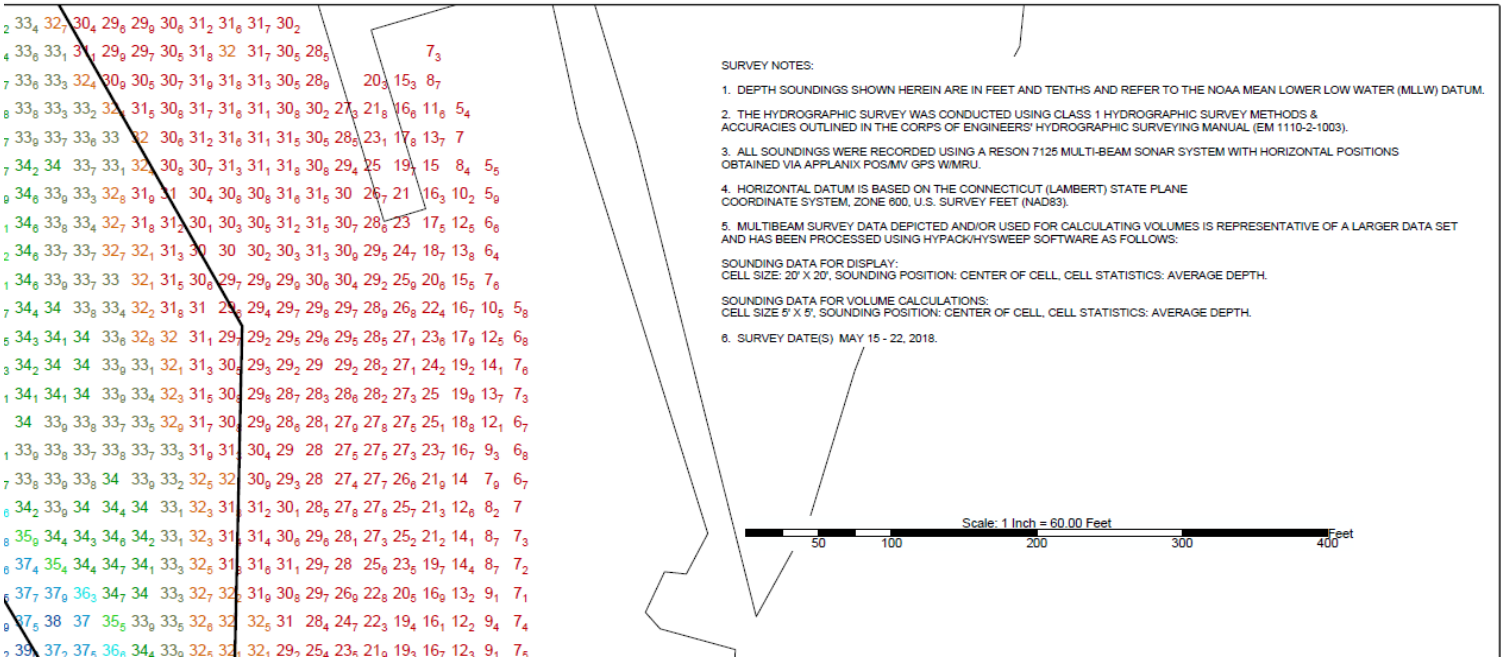
SURVEY NOTES:
1. DEPTH SOUNDINGS SHOWN HEREIN ARE IN FEET AND TENTHS AND REFER TO THE NOAA MEAN LOWER LOW WATER (MLLW) DATUM.
2. THE HYDROGRAPHIC SURVEY WAS CONDUCTED USING CLASS 1 HYDROGRAPHIC SURVEY METHODS & ACCURACIES OUTLINED IN THE CORPS OF ENGINEERS' HYDROGRAPHIC SURVEYING MANUAL (EM 1110-2-1003).
3. ALL SOUNDINGS WERE RECORDED USING A RESON 7125 MULTI-BEAM SONAR SYSTEM WITH HORIZONTAL POSITIONS OBTAINED VIA APPLANIX POS/MV GPS W/MRU.
4. HORIZONTAL DATUM IS BASED ON THE CONNECTICUT (LAMBERT) STATE PLANE COORDINATE SYSTEM, ZONE 600, U.S. SURVEY FEET (NAD83).
5. MULTIBEAM SURVEY DATA DEPICTED AND/OR USED FOR CALCULATING VOLUMES IS REPRESENTATIVE OF A LARGER DATA SET AND HAS BEEN PROCESSED USING HYPACK/HYSWEEP SOFTWARE AS FOLLOWS:
SOUNDING DATA FOR DISPLAY:
CELL SIZE: 20' X 20', SOUNDING POSITION: CENTER OF CELL, CELL STATISTICS: AVERAGE DEPTH.
SOUNDING DATA FOR VOLUME CALCULATIONS:
CELL SIZE 5' X 5', SOUNDING POSITION: CENTER OF CELL, CELL STATISTICS: AVERAGE DEPTH.
6. SURVEY DATE(S) MAY 15 - 22, 2018.
Scale: 1 Inch = 60.00 Feet
50
100
200
300
400
Feet

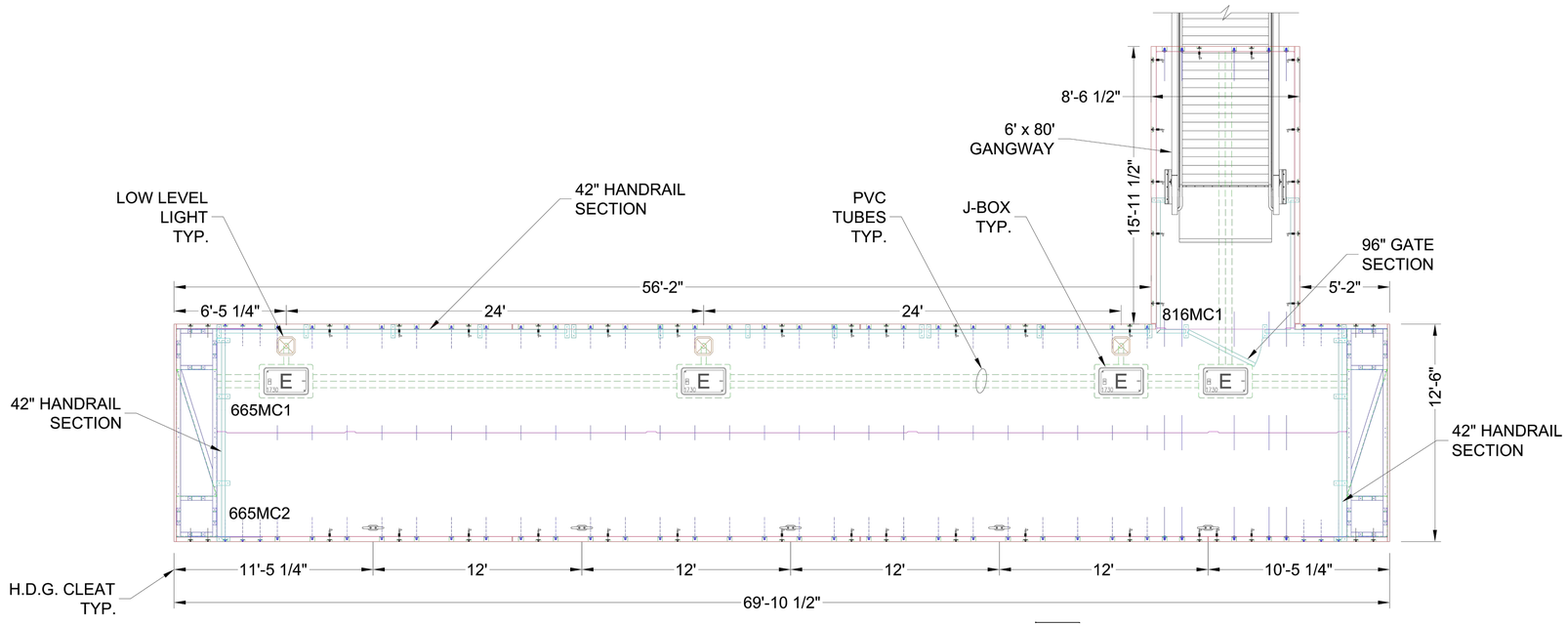

Northeast Division
225 Hanover Road
York, PA 17408
TEL: (717) 793-8520

Engineering
3825 E. Sunset Dr.
Bellingham, WA 98226
TEL: (360) 715-0121

www.bellingham-marine.com

This drawing contains proprietary information which is the property of Bellingham Marine Industries, Inc., and shall not be copied, reproduced or made available to third parties without prior written permission from Bellingham Marine Industries, Inc. Bellingham Marine®, Unifloat®, and Unideck® are registered tradenames of Bellingham Marine Industries, Inc.

Bellingham MARINE®
THE WORLD'S MOST COMPREHENSIVE MARINA BUILDER

REVISIONS

NO.	DATE	DESCRIPTION	BY

NAUTILUS SUBMARINE MUSEUM
WATER TAXI DOCK
GROTON, CT

OVERALL LAYOUT

PROJECT NUMBER: PRELIM

SCALE:	N.T.S.
SHEET SIZE:	11" x 17"
DATE:	2.8.2019
SHEET NO:	1
DRAWN BY:	SG
CHECKED BY:	_
DRAWING:	OL1

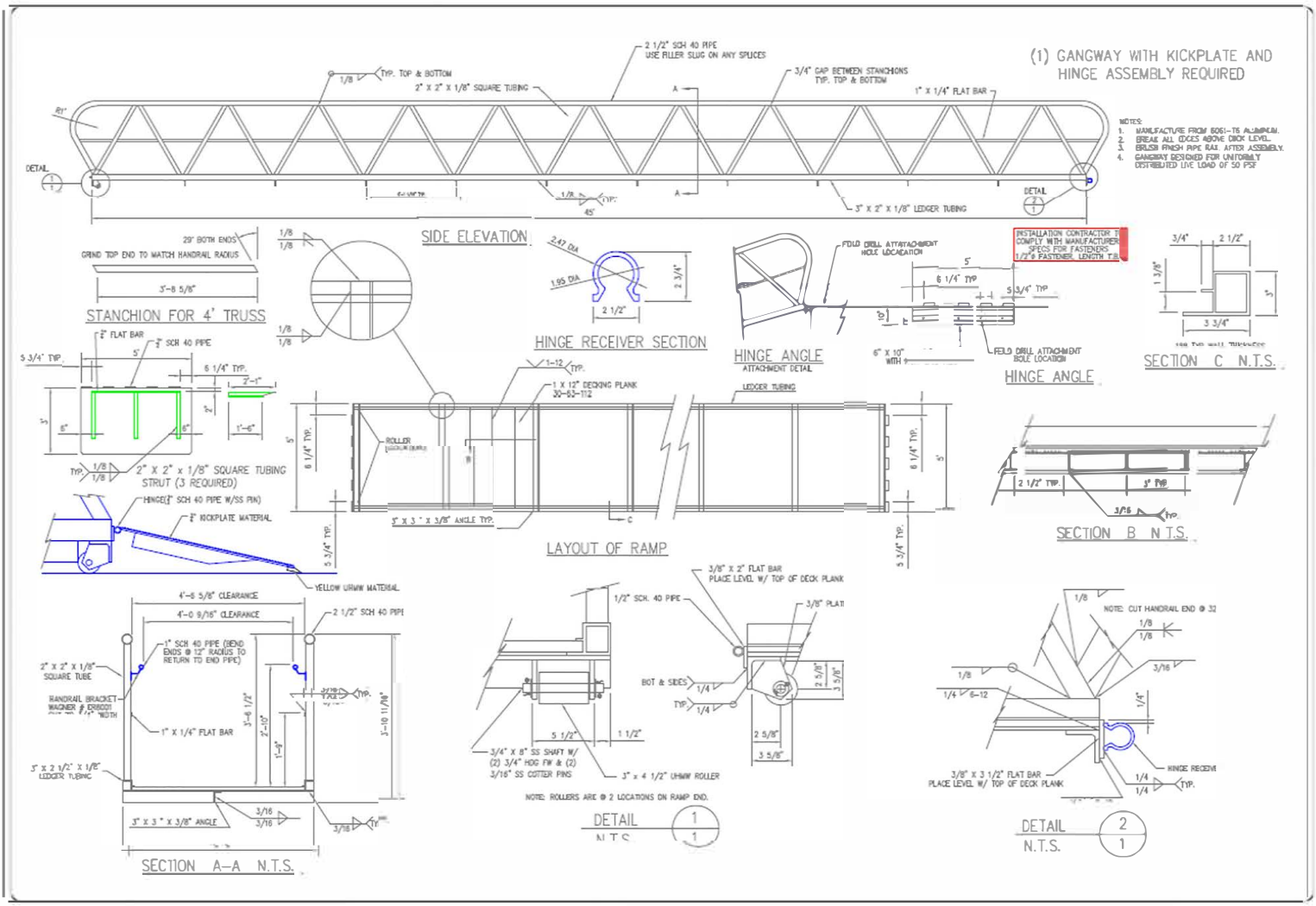
(1) GANGWAY WITH KICKPLATE AND HINGE ASSEMBLY REQUIRED
2 1/2" SCH 40 PIPE USE FILLER SLUG ON ANY SPLICES
3/4" GAP BETWEEN STANCHIONS TYP. TOP & BOTTOM
1" X 1/4" FLAT BAR
2" X 2" X 1/8" SQUARE TUBING
3" X 2" X 1/8" LEDGER TUBING
NOTES:
1. MANUFACTURE FROM 6061-T6 ALUMINUM.
2. BREAK ALL EDGES ABOVE DECK LEVEL.
3. BRUSH FINISH PIPE RAIL AFTER ASSEMBLY.
4. GANGWAY DESIGNED FOR UNIFORMLY DISTRIBUTED LIVE LOAD OF 50 PSF
SIDE ELEVATION
STANCHION FOR 4' TRUSS
GRIND TOP END TO MATCH HANDRAIL RADIUS
HINGE RECEIVER SECTION
HINGE ANGLE
ATTACHMENT DETAIL
FIELD DRILL ATTACHMENT HOLE LOCATION
INSTALLATION CONTRACTOR TO COMPLY WITH MANUFACTURERS SPECS FOR FASTENERS
HINGE ANGLE
SECTION C N.T.S.
2" FLAT BAR
2" SCH 40 PIPE
2" X 2" x 1/8" SQUARE TUBING STRUT (3 REQUIRED)
HINGE(2" SCH 40 PIPE W/SS PIN)
2" KICKPLATE MATERIAL
YELLOW UHMW MATERIAL
1 X 12" DECKING PLANK 30-53-112
LEDGER TUBING
ROLLER
3" X 3 " X 3/8" ANGLE TYP.
LAYOUT OF RAMP
SECTION B N.T.S.
4'-6 5/8" CLEARANCE
4'-0 9/16" CLEARANCE
2 1/2" SCH 40 PIPE
1" SCH 40 PIPE (BEND ENDS @ 12" RADIUS TO RETURN TO END PIPE)
2" X 2" X 1/8" SQUARE TUBE
HANDRAIL BRACKET WAGNER # ERBOOT
1" X 1/4" FLAT BAR
3" X 2 1/2" X 1/8" LEDGER TUBING
3" X 3 " X 3/8" ANGLE
SECTION A-A N.T.S.
1/2" SCH. 40 PIPE
3/8" X 2" FLAT BAR PLACE LEVEL W/ TOP OF DECK PLANK
3/8" PLATE
BOT & SIDES
3/4" X 8" SS SHAFT W/ (2) 3/4" HDG FW & (2) 3/16" SS COTTER PINS
3" x 4 1/2" UHMW ROLLER
NOTE: ROLLERS ARE @ 2 LOCATIONS ON RAMP END.
DETAIL 1 N.T.S.
NOTE: CUT HANDRAIL END @ 32
3/8" X 3 1/2" FLAT BAR PLACE LEVEL W/ TOP OF DECK PLANK
HINGE RECEIVE
DETAIL 2 N.T.S.
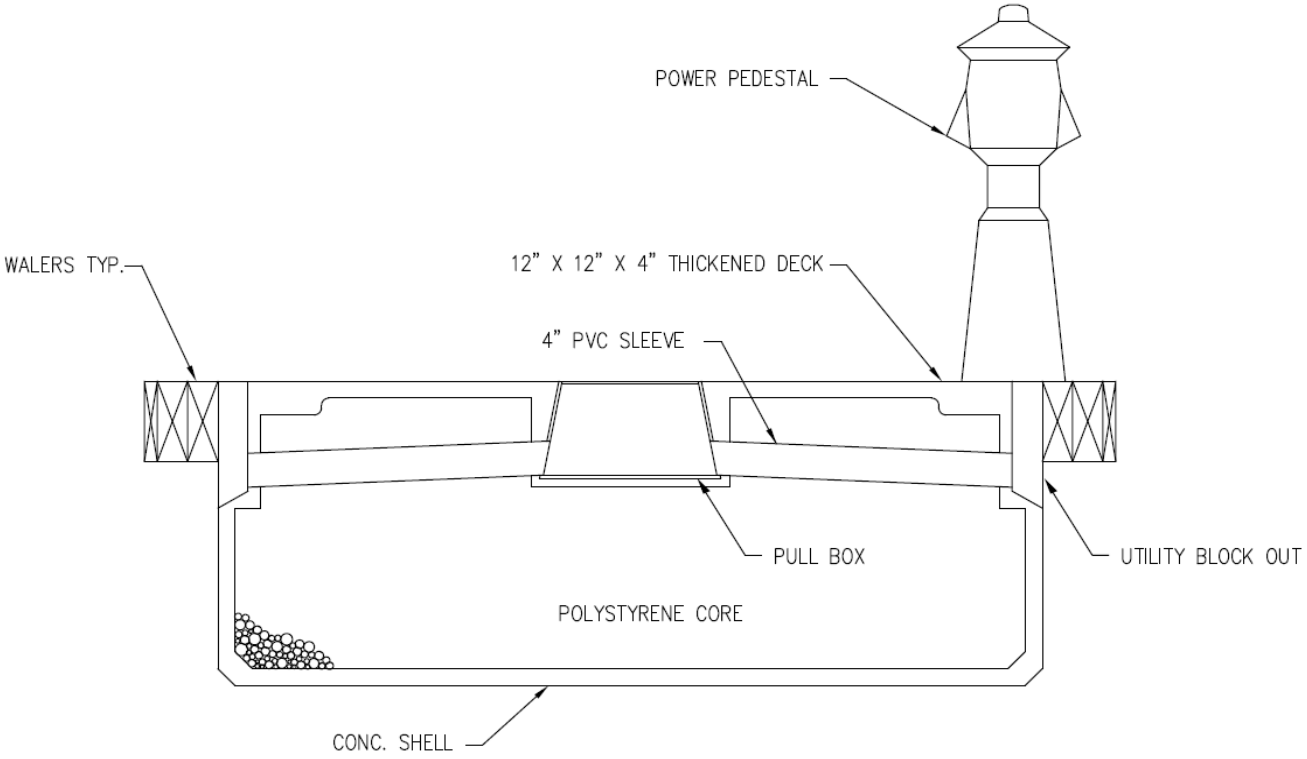
NOTES: 1. MOUNT PEDESTAL BASE USING SS STUDS EPOXIED INTO THICKENED DECK AND SS LAG SCREWS INTO WALERS.